GTW
Dr. Gebert Technologie und Wälzlager GmbH
powered by precision

High-precision, High-speed Supporting Bearing Arrangements for Test Benches and Industrial Applications

—

Best Performance Partner for Special Electrical Motors and Equipment

Table of Content

—

High-precision, High-speed Electrical Motors

1. Introduction of GTW GmbH and Associated Companies

—

Locations

1. Introduction of GTW GmbH and Associated Companies

—

1.1 Locations

GTW GmbH, Schweinfurt / Germany

GTW TW, Ltd., Taichung / Taiwan

2. Universal Supporting Bearing Arrangements

—

Housing Types | Interfaces

2. Universal Supporting Bearing Arrangements

2.1 Housing Types

quill

flange housing

block housing

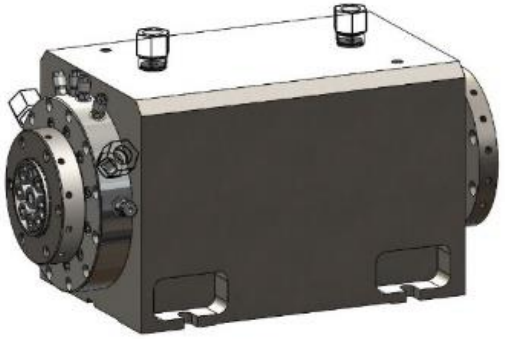

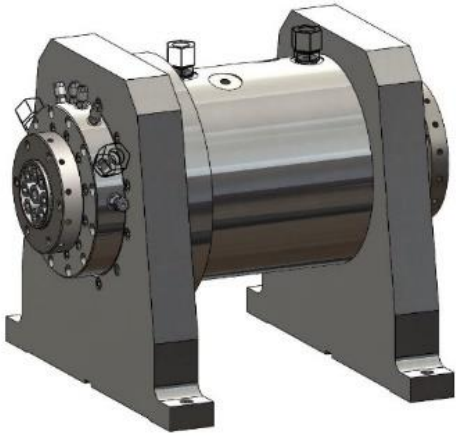

pedestal housing

2. Universal Supporting Bearing Arrangements

2.2 Interfaces

high-precision grinded shaft end	adapter for torque measuring system	precision coupling	high-precision HSK coupling interface	automatically actuated clamping mechanism
	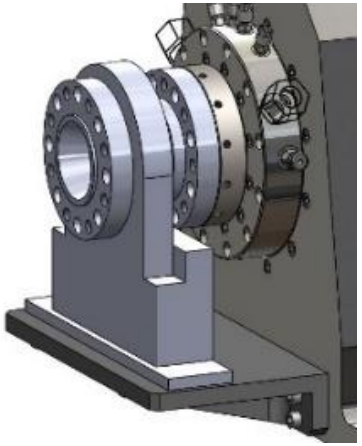			

3. Types of Universal Supporting Bearing Arrangements

—

1671LS1 | 1564LS1 | 1585LS1 | 1693LS1

3. Types of Universal Supporting Bearing Arrangements

3.1 Type **1671LS1**

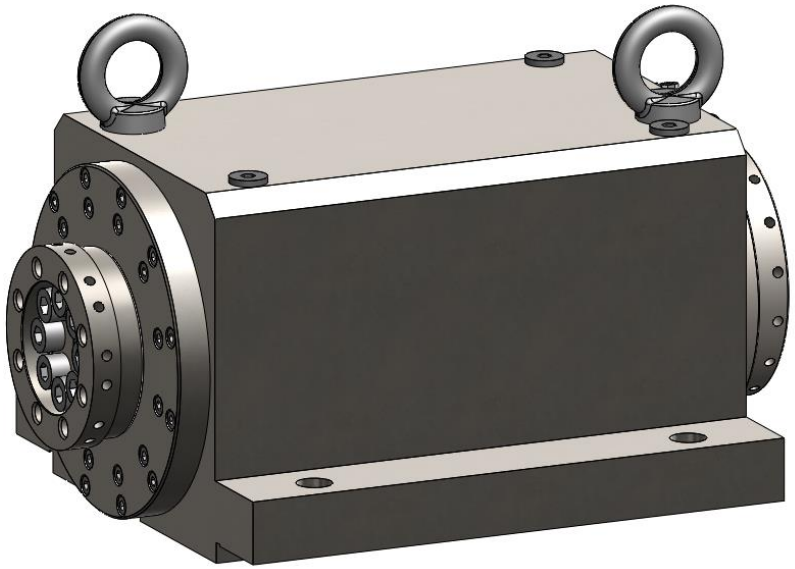

type of lubrication	speed limit [min^{-1}]
oil-air lubrication	25.000
grease replenishing technology	20.000
greased for life (F_{10} = 10,000 h at n_{max})	16.000

Other speeds on request.

3. Types of Universal Supporting Bearing Arrangements

3.1 Type **1671LS1**

- Mass of shaft: 9.3 kg
- Inertia of the shaft: 0.005867 kgm²
- Rigidity at shaft nose
  - Axial static: 170 N/µm
  - Axial dynamic: 105 N/µm (at 25,000 rpm)
  - Radial static: 300 N/µm
  - Radial dynamic: 230 N/µm (at 25,000 rpm)

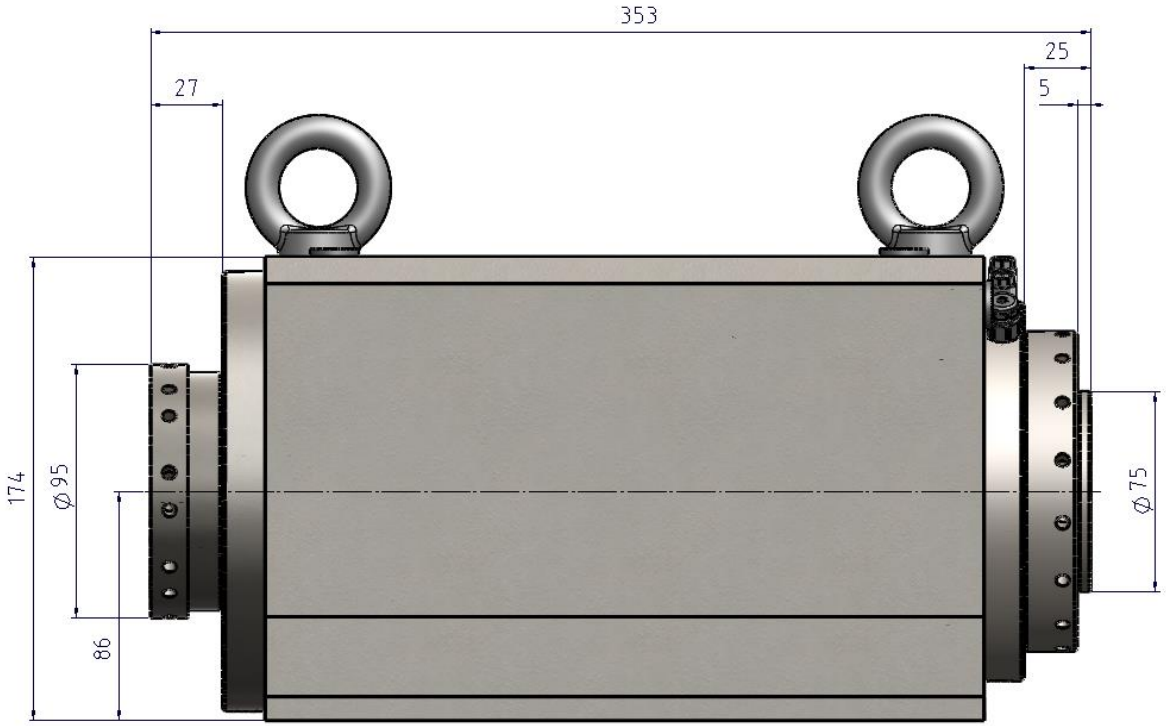

3. Types of Universal Supporting Bearing Arrangements

3.1 Type **1671LS1**

– Axial load – in pushing direction

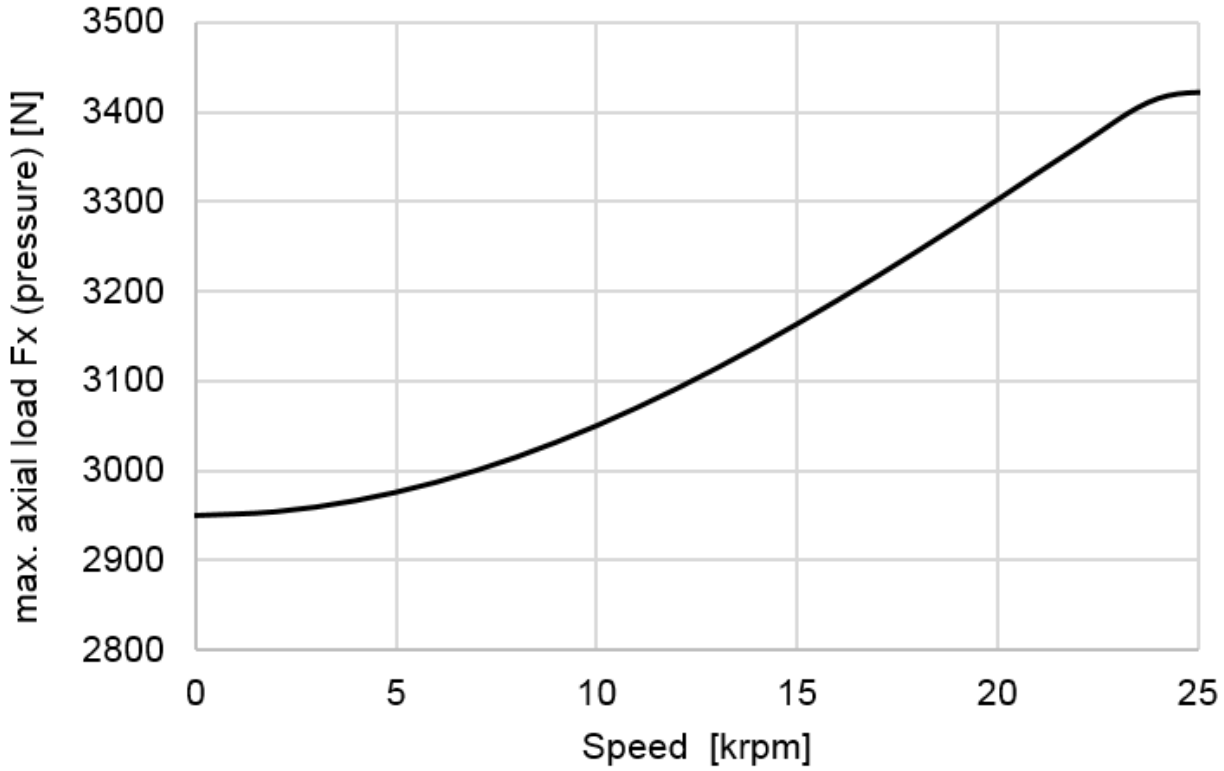

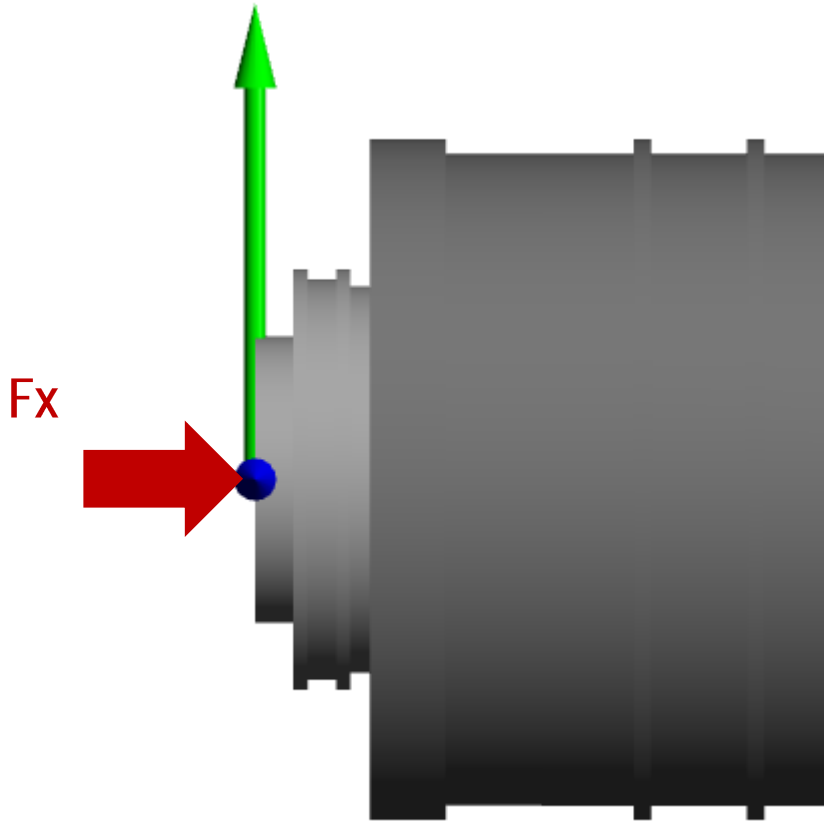

3. Types of Universal Supporting Bearing Arrangements

3.1 Type **1671LS1**

– Axial load – in pulling direction

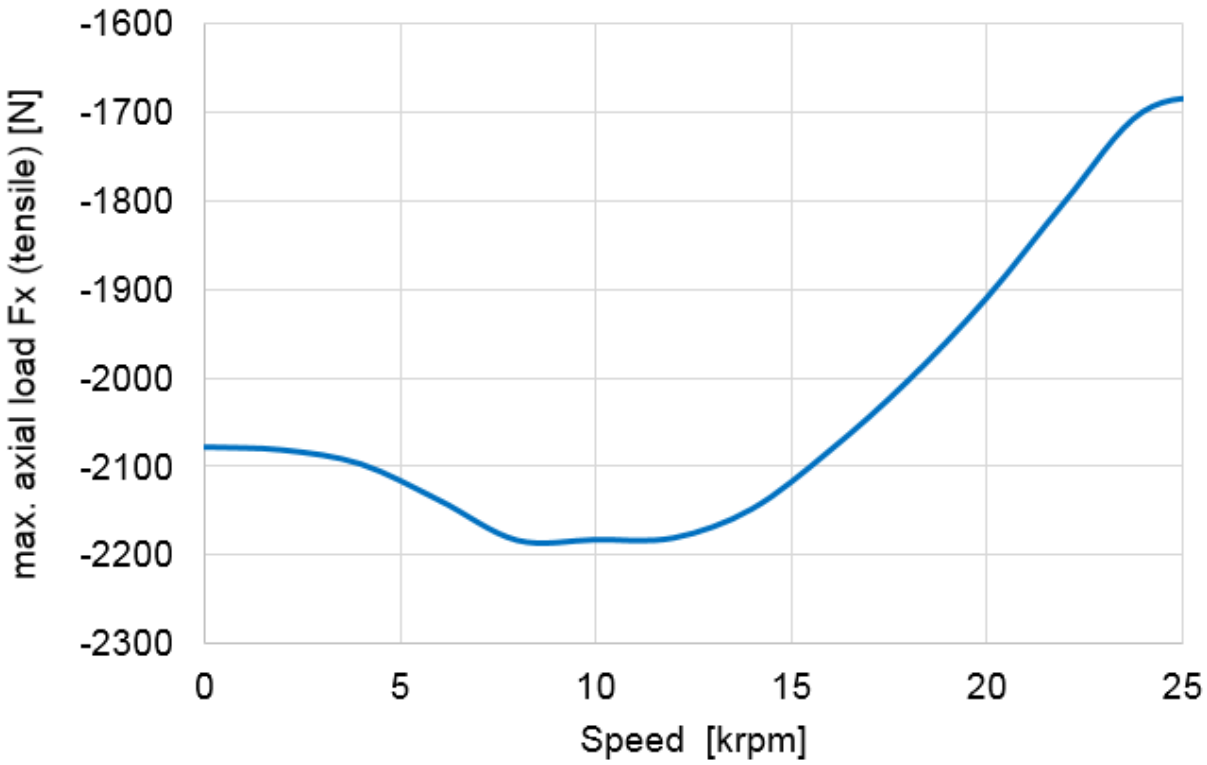

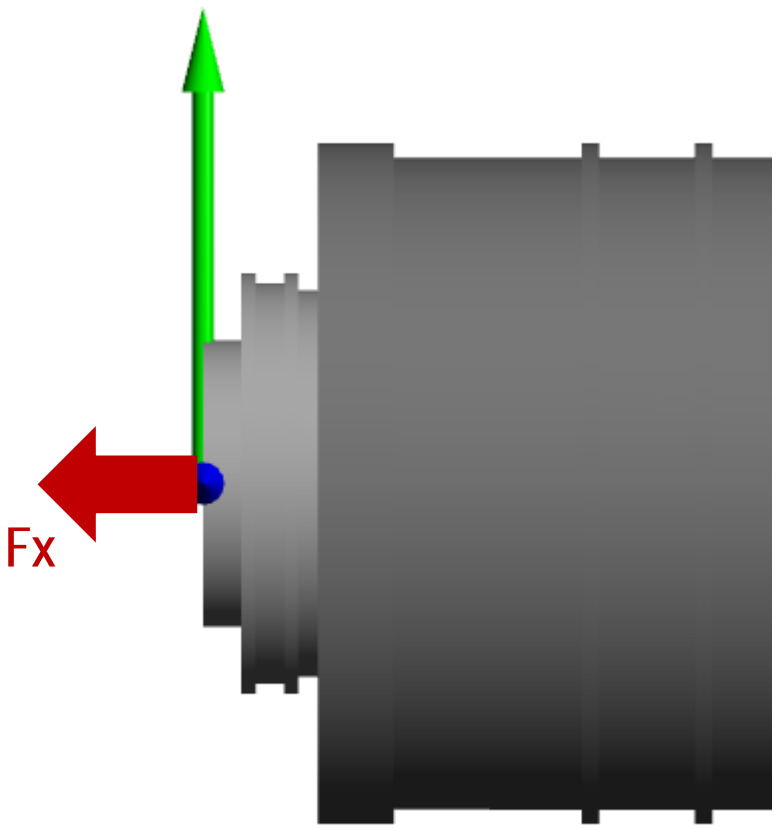

3. Types of Universal Supporting Bearing Arrangements

3.1 Type **1671LS1**

– Radial load

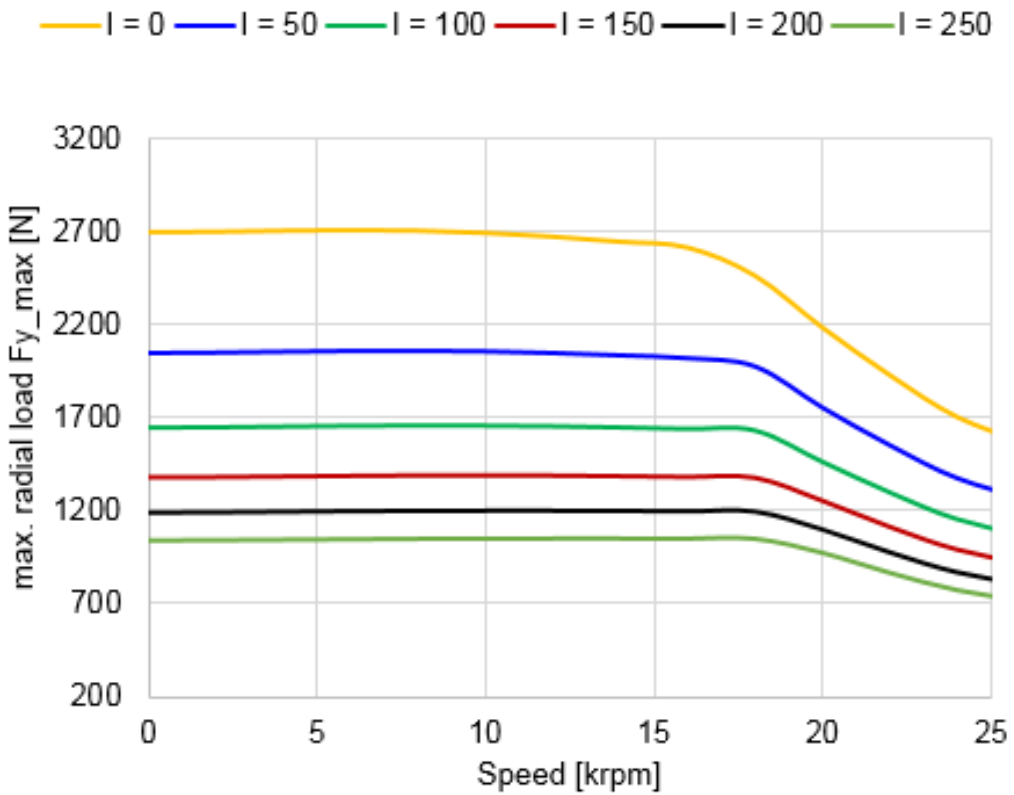

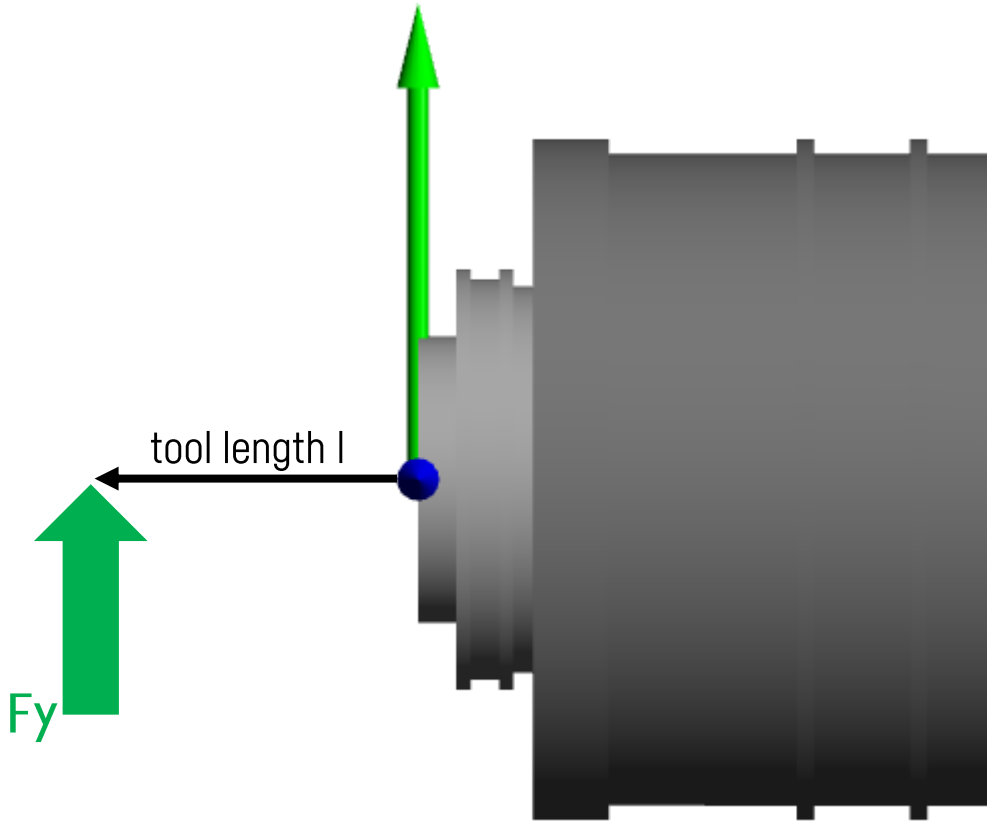

3. Types of Universal Supporting Bearing Arrangements

3.1 Type **1671LS1**

– Dynamic load

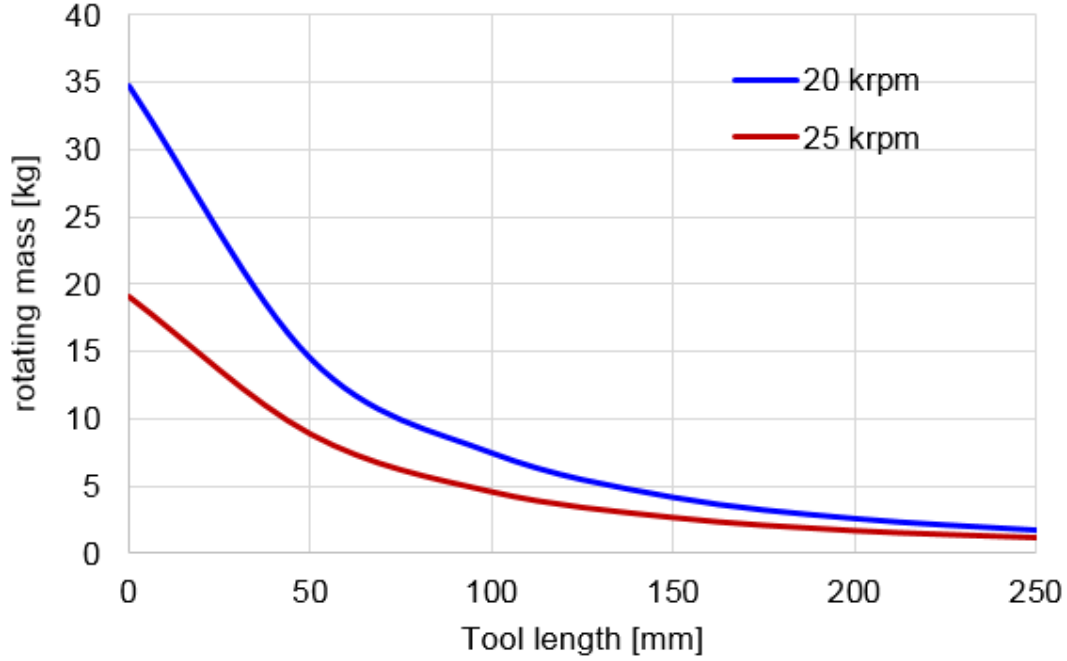

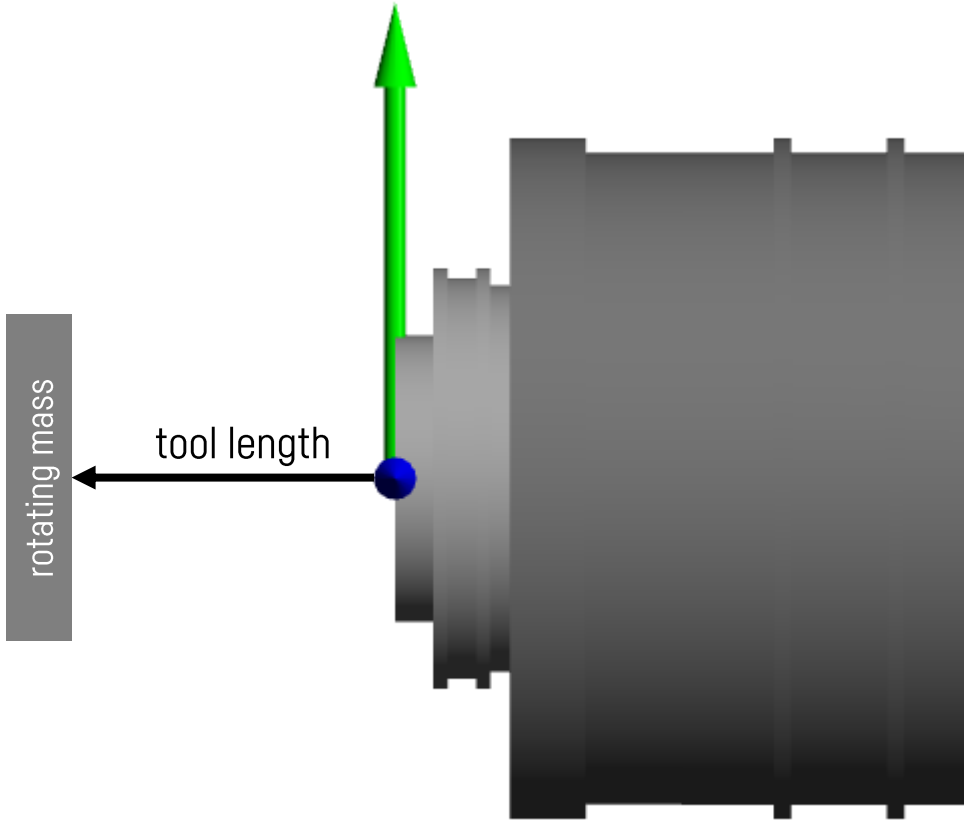

- balancing grade of rotating mass: G2.5
- global Rayleigh-damping: 1%

3. Types of Universal Supporting Bearing Arrangements

3.1 Type **1671LS1**

– Friction losses

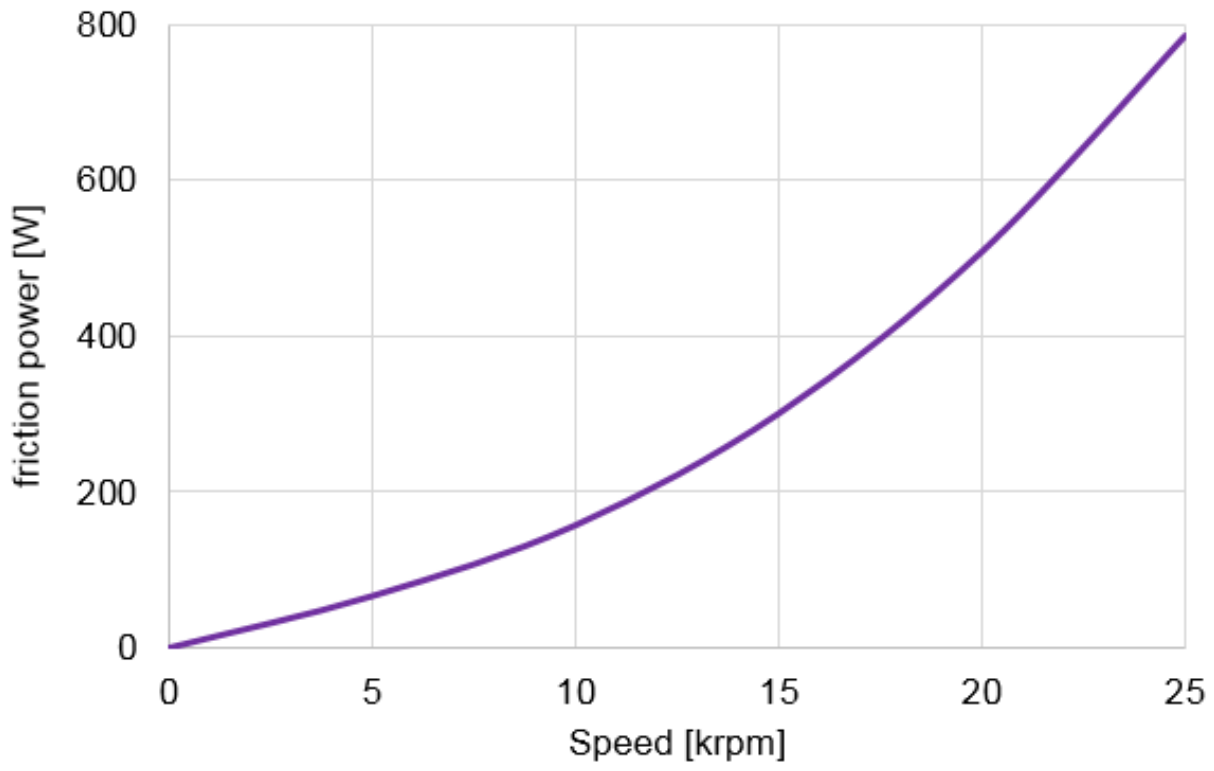

3. Types of Universal Supporting Bearing Arrangements

3.2 Type **1564LS1**

type of lubrication	speed limit [min^{-1}]
oil-air lubrication	20.000
grease replenishing technology	16.000
greased for life (F_{10} = 10,000 h at n_{max})	12.000

Other speeds on request.

3. Types of Universal Supporting Bearing Arrangements

3.2 Type **1564LS1**

- Mass of shaft: 14.6 kg
- Inertia of the shaft: 0.015190 kgm²
- Rigidity at shaft nose
  - Axial static: 160 N/µm
  - Axial dynamic: 100 N/µm (at 20,000 rpm)
  - Radial static: 275 N/µm
  - Radial dynamic: 220 N/µm (at 20,000 rpm)

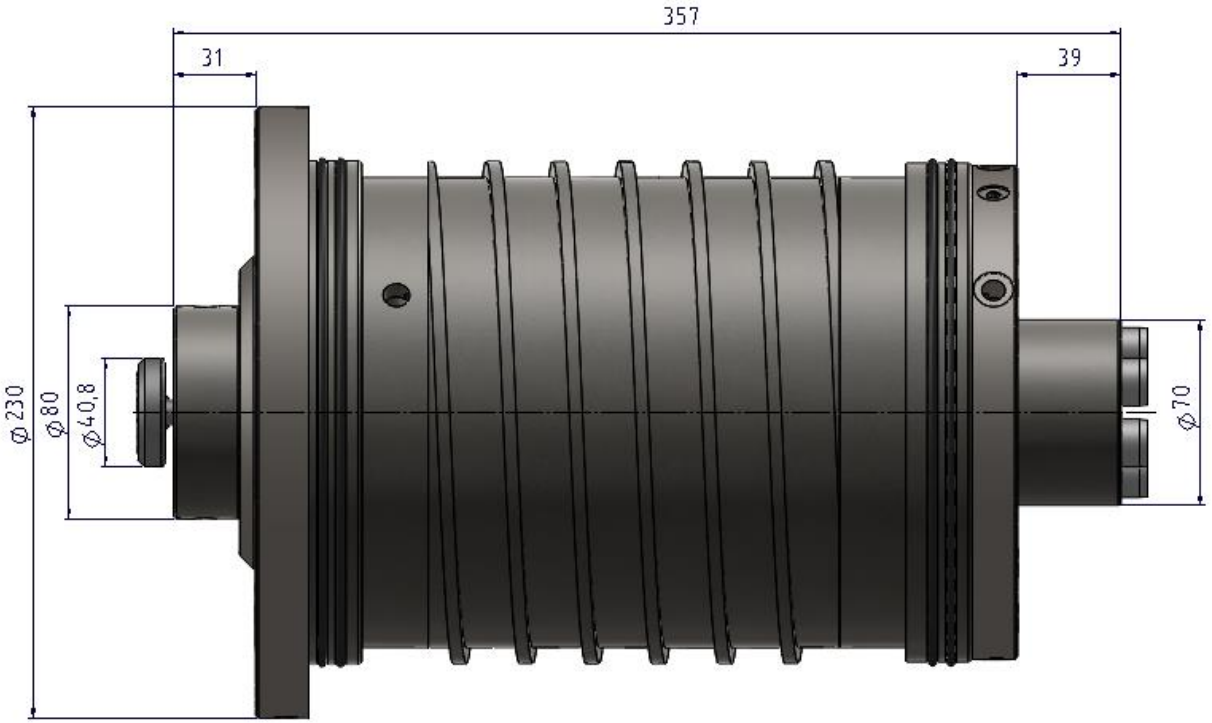

3. Types of Universal Supporting Bearing Arrangements

3.2 Type **1564LS1**

– Axial load – in pushing direction

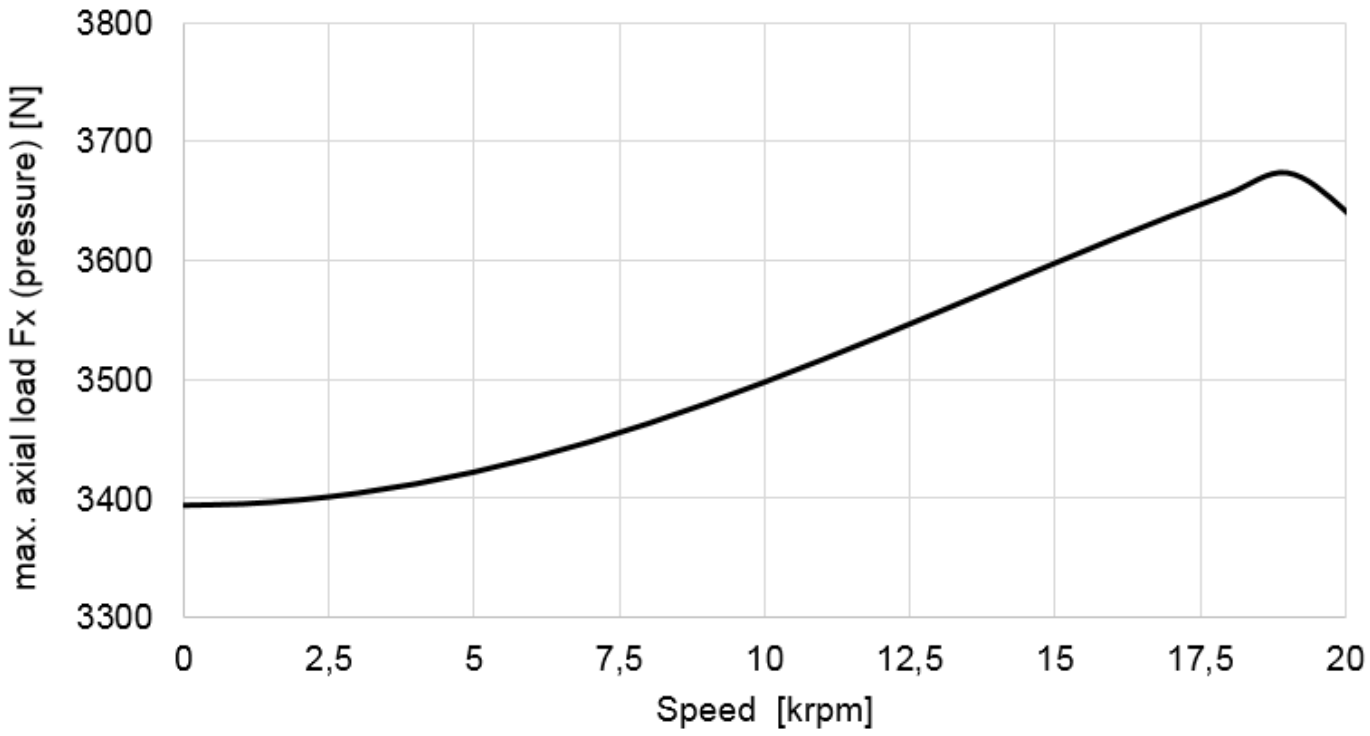

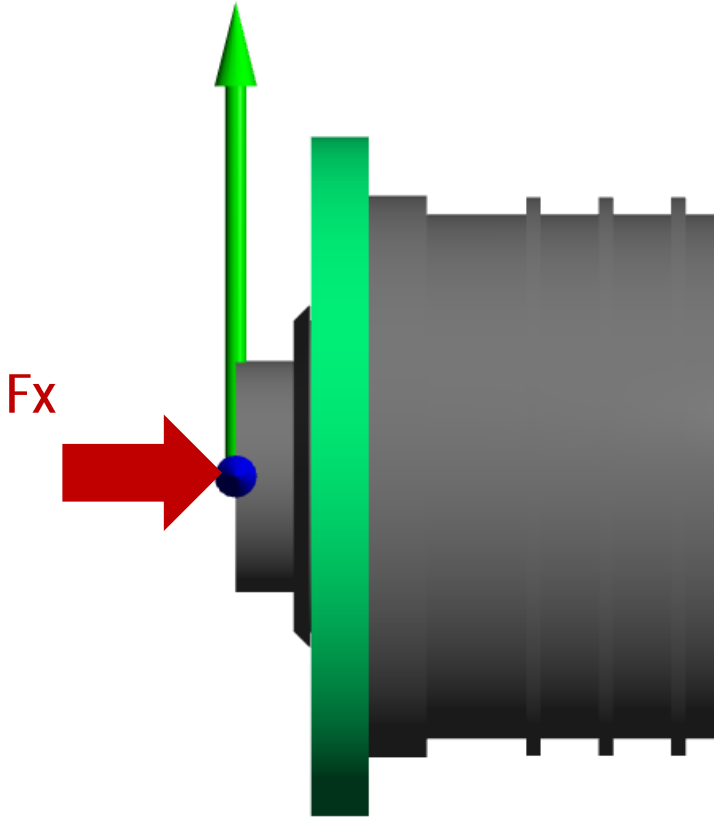

3. Types of Universal Supporting Bearing Arrangements

3.2 Type **1564LS1**

– Axial load – in pulling direction

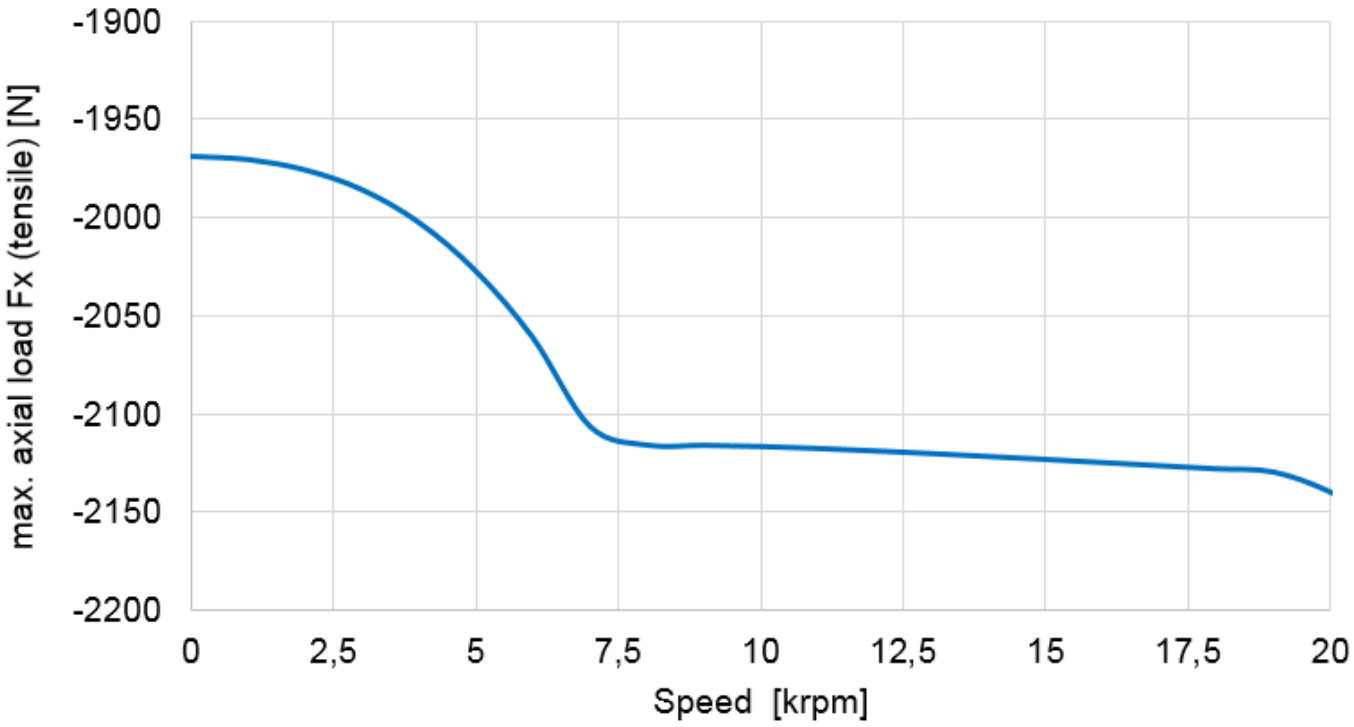

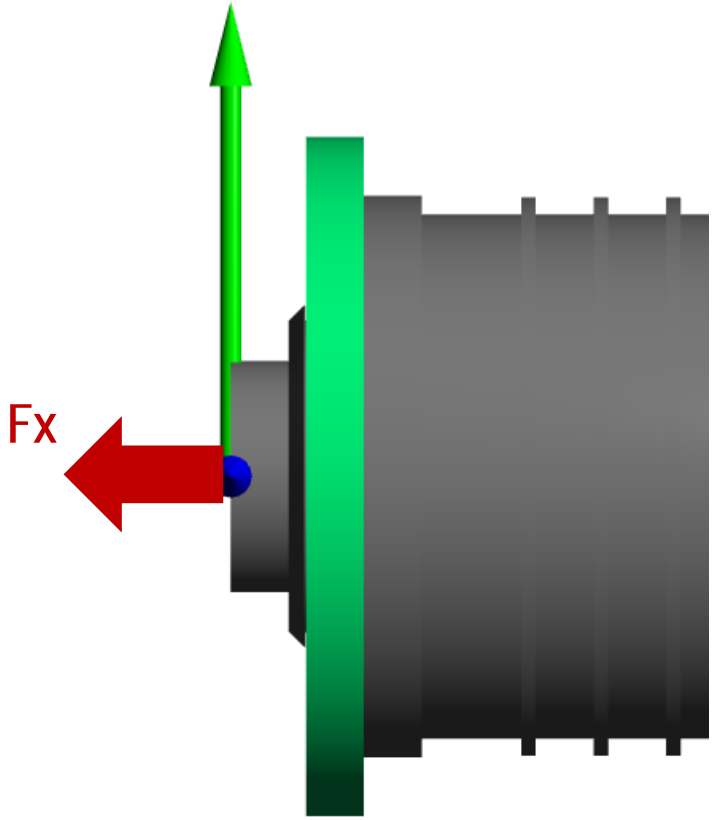

3. Types of Universal Supporting Bearing Arrangements

3.2 Type **1564LS1**

– Radial load

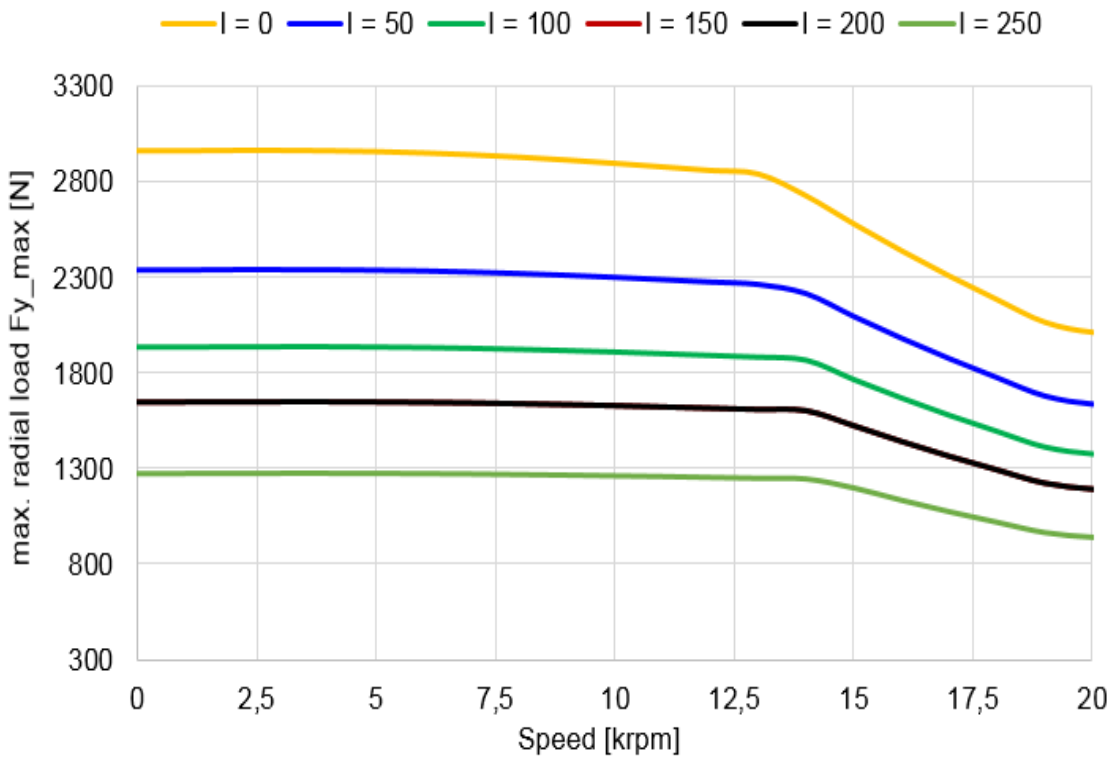

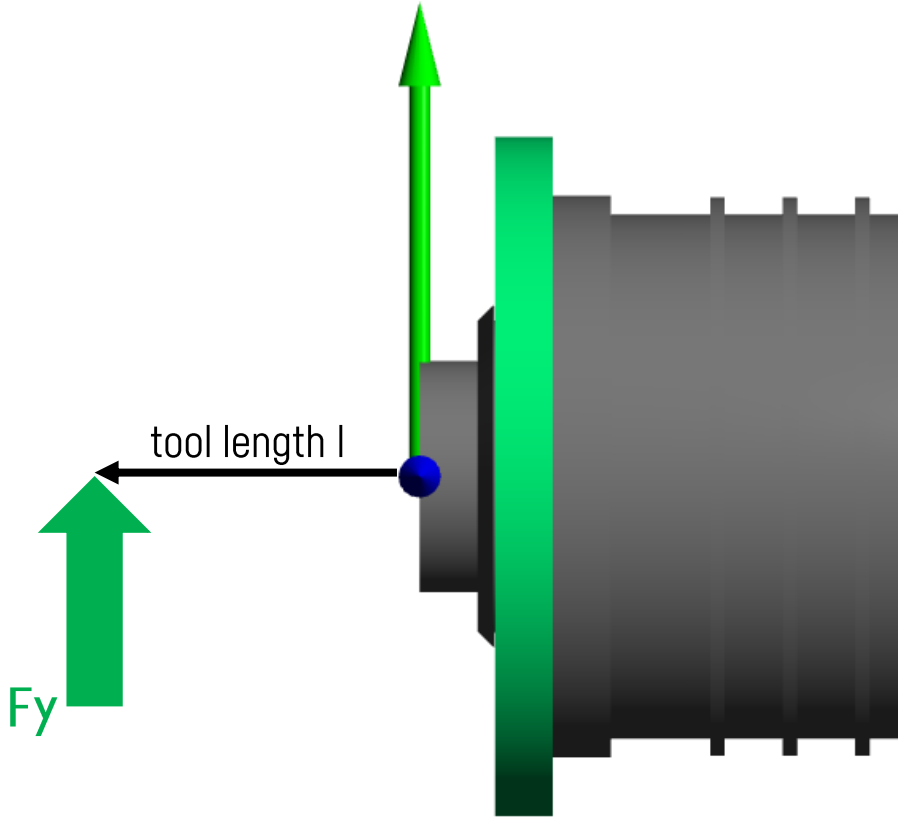

3. Types of Universal Supporting Bearing Arrangements

–

3.2 Type **1564LS1**

– Dynamic load

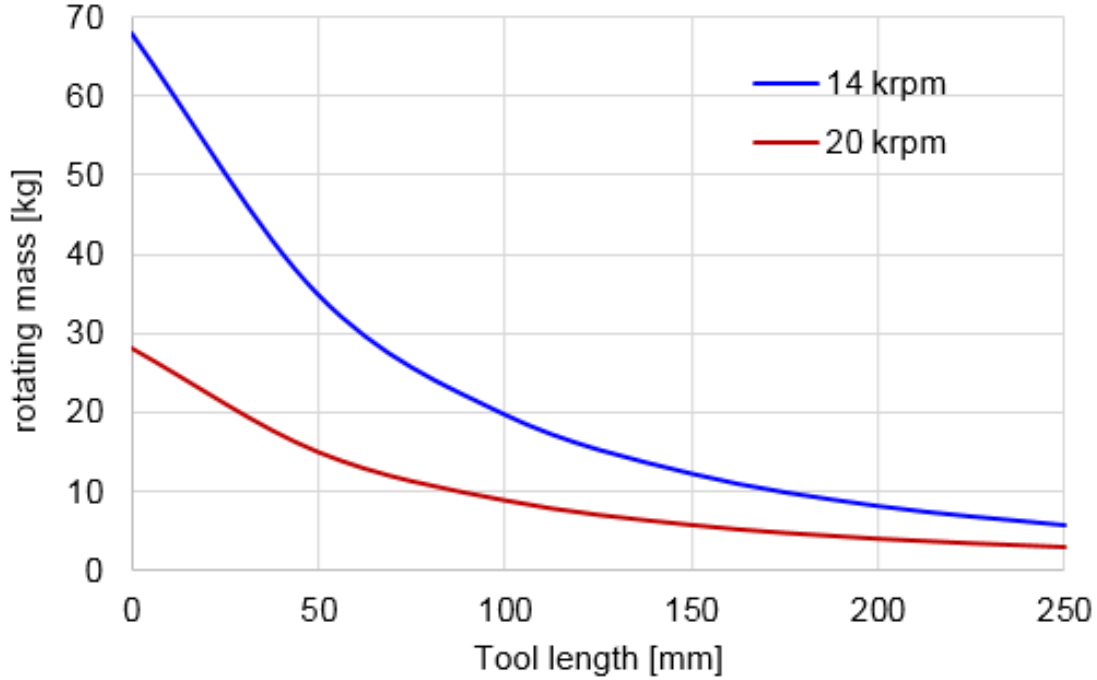

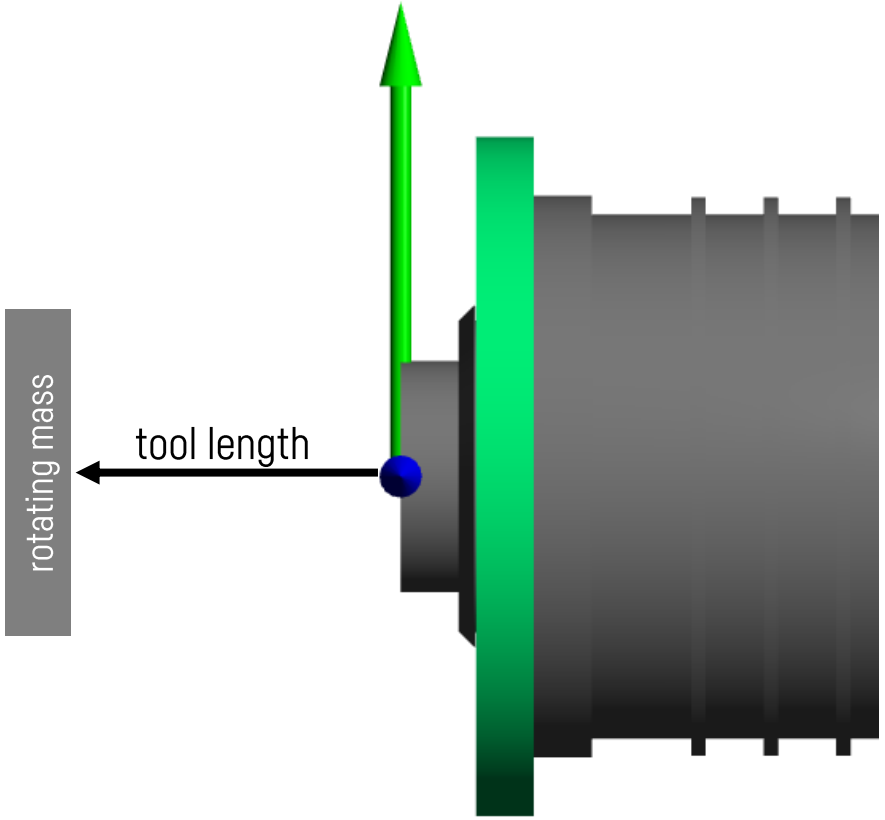

- balancing grade of rotating mass: G2.5
- global Rayleigh-damping: 1%

3. Types of Universal Supporting Bearing Arrangements

3.2 Type **1564LS1**

– Friction losses

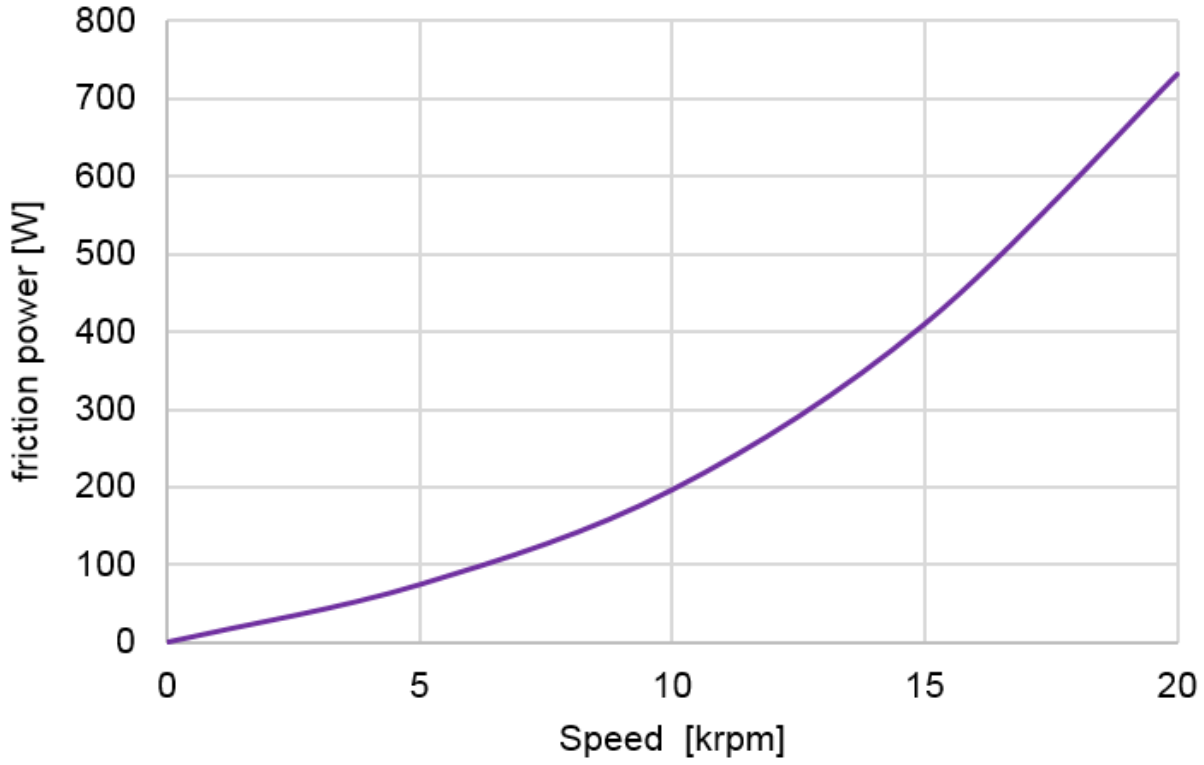

3. Types of Universal Supporting Bearing Arrangements

3.3 Type **1585LS1**

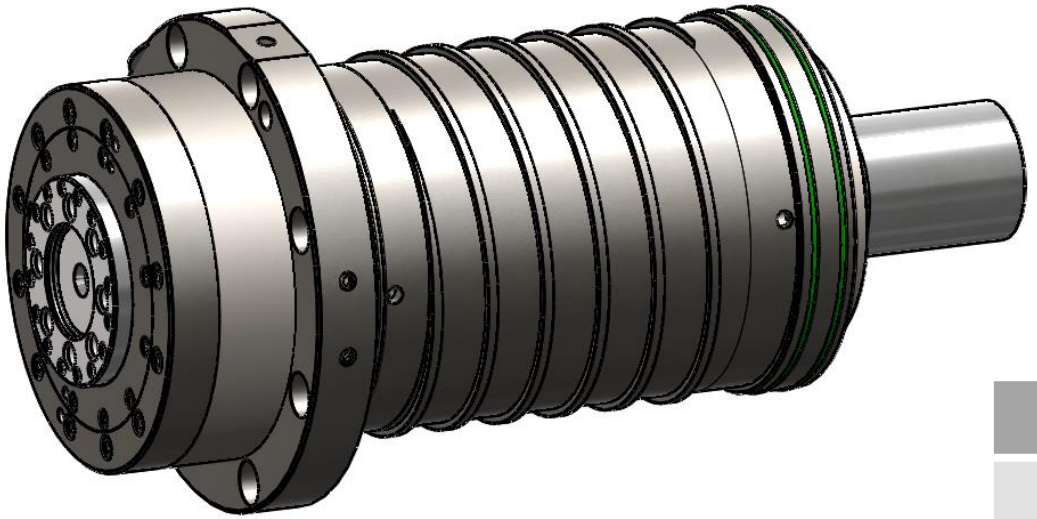

type of lubrication	speed limit [min^{-1}]
oil-air lubrication	30.000
grease replenishing technology	25.000
greased for life (F_{10} = 10,000 h at n_{max})	20.000

Other speeds on request.

3. Types of Universal Supporting Bearing Arrangements

3.3 Type **1585LS1**

- Mass of shaft: 8.9 kg
- Inertia of the shaft: 0.004303 kgm²
- Rigidity at shaft nose
  - Axial static: 120 N/µm
  - Axial dynamic: 55 N/µm (at 30,000 rpm)
  - Radial static: 240 N/µm
  - Radial dynamic: 125 N/µm (at 30,000 rpm)

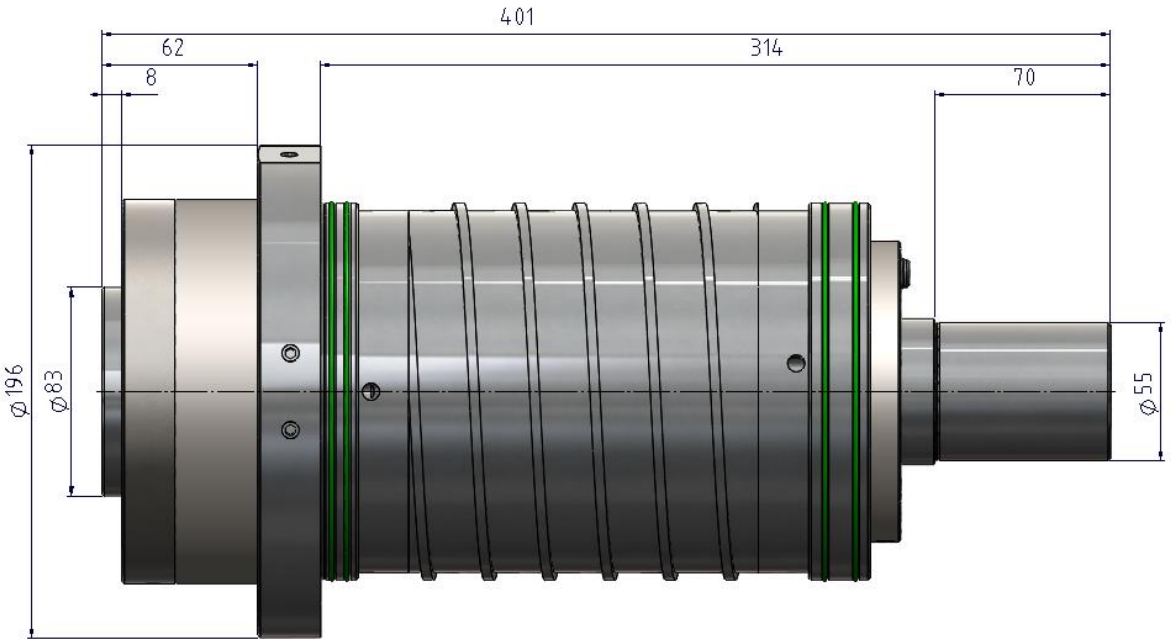

3. Types of Universal Supporting Bearing Arrangements

3.3 Type **1585LS1**

– Axial load – in pushing direction

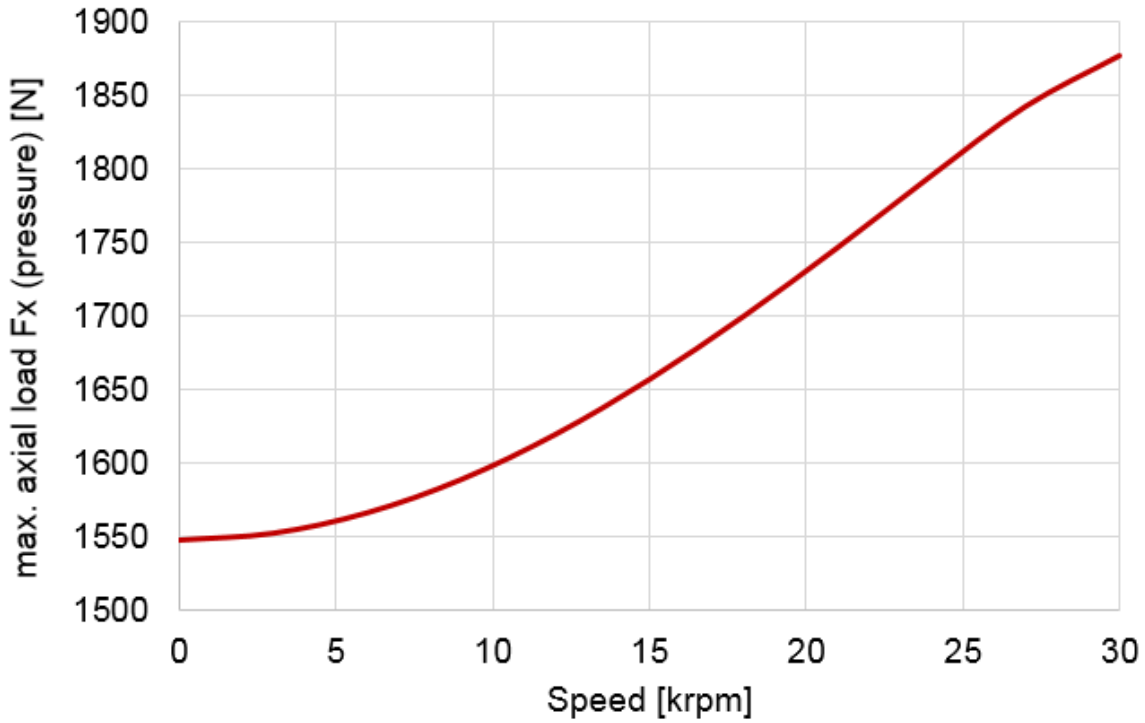

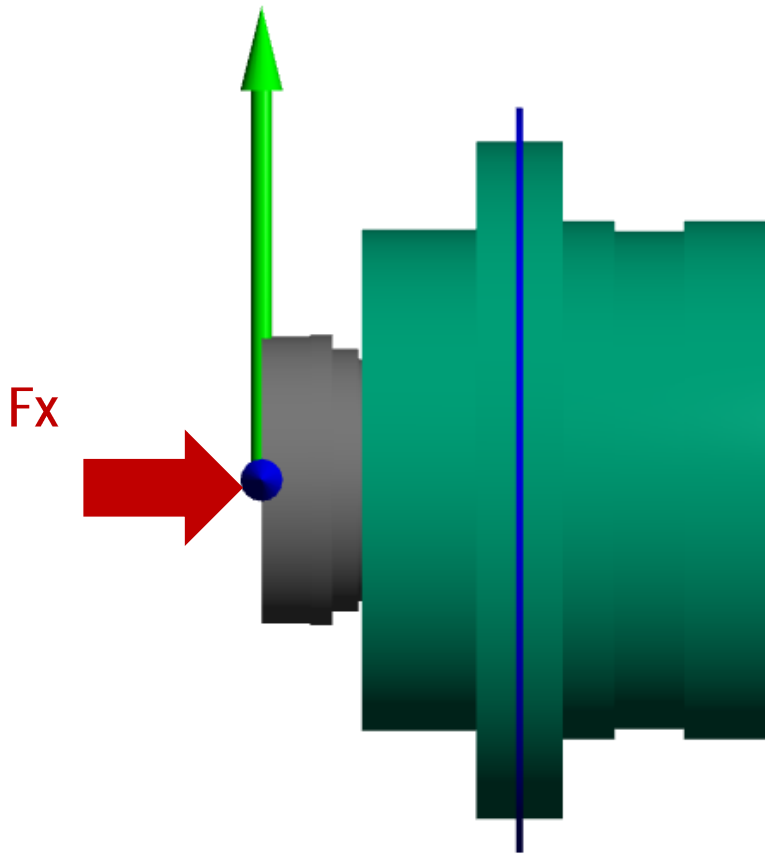

3. Types of Universal Supporting Bearing Arrangements

3.3 Type **1585LS1**

– Axial load – in pulling direction

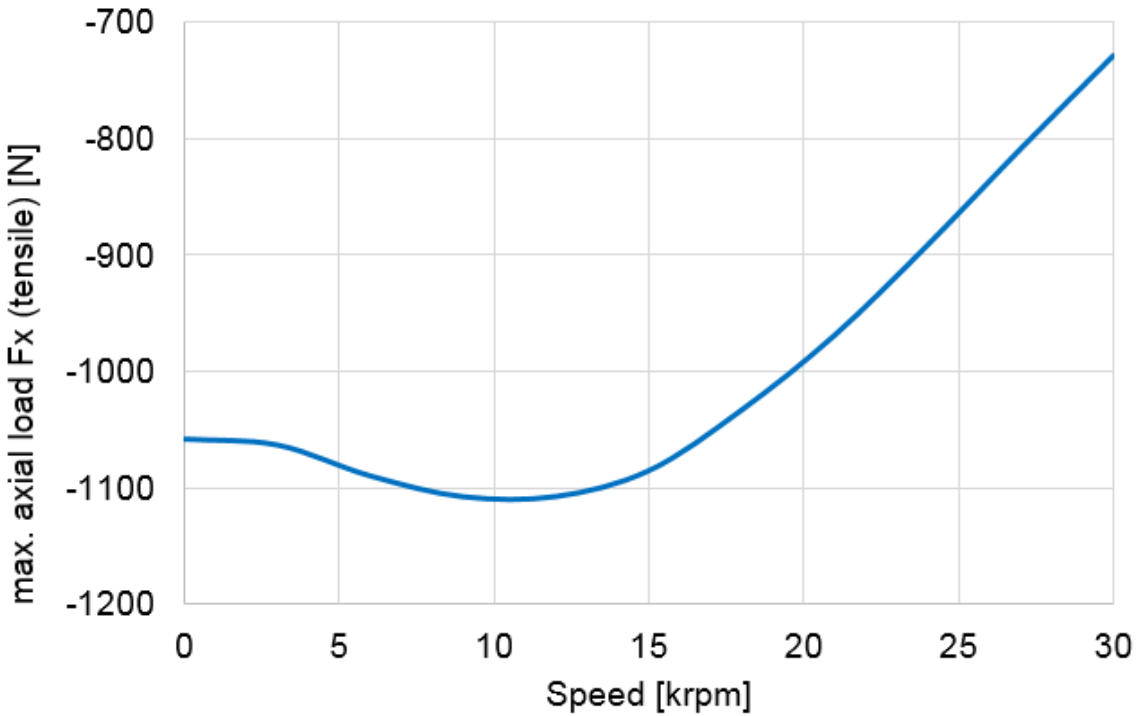

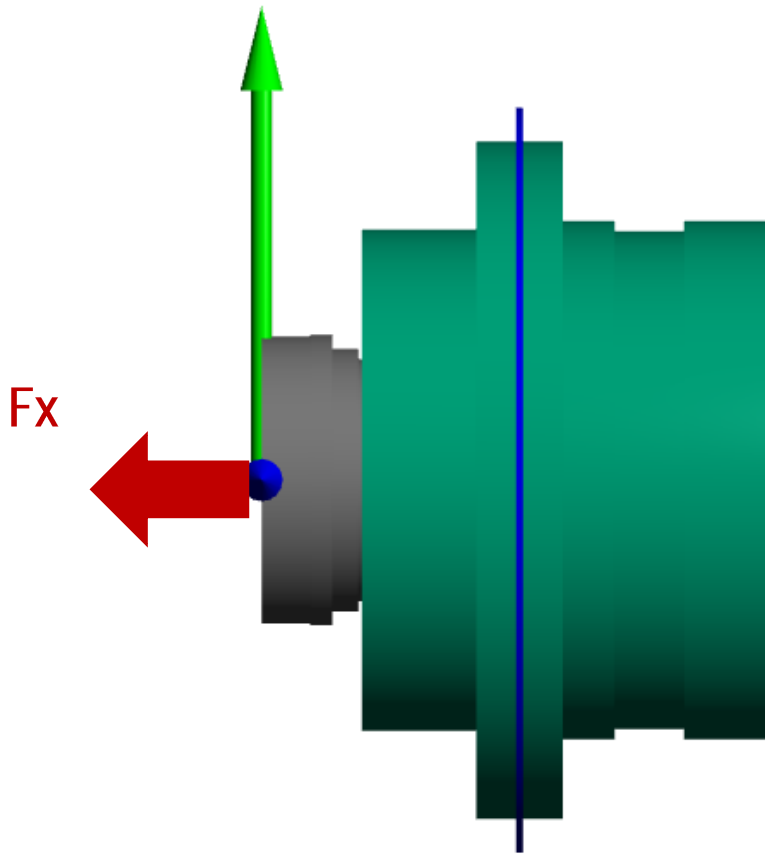

3. Types of Universal Supporting Bearing Arrangements

3.3 Type **1585LS1**

– Radial load

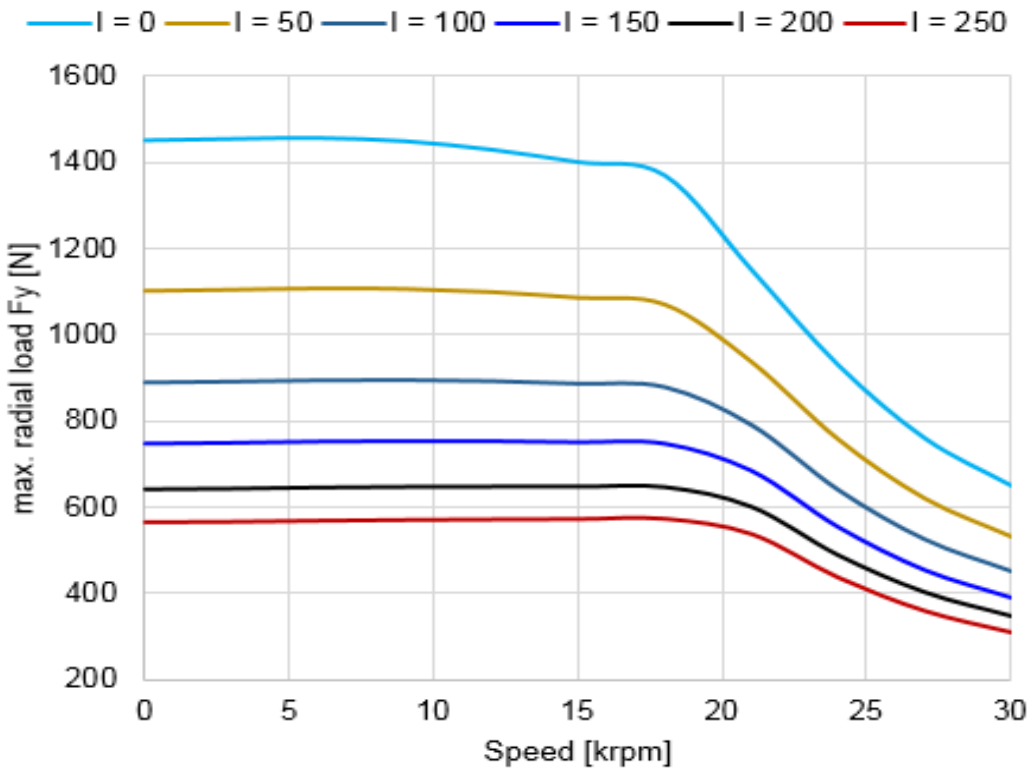

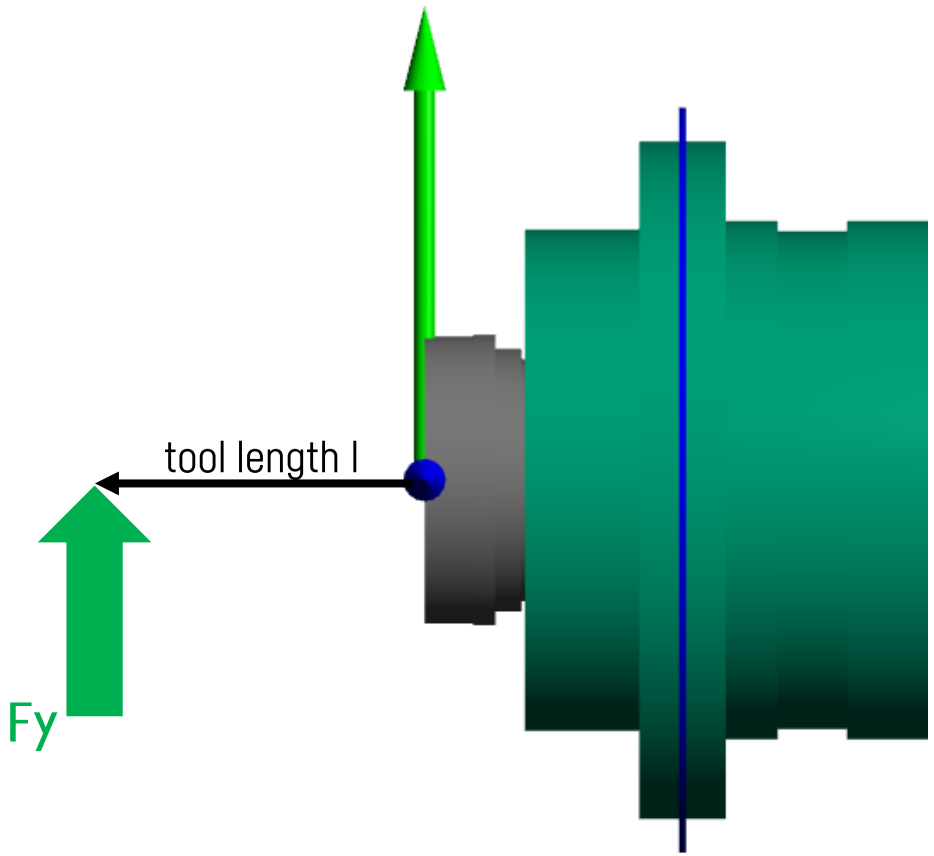

3. Types of Universal Supporting Bearing Arrangements

3.3 Type **1585LS1**

– Dynamic load

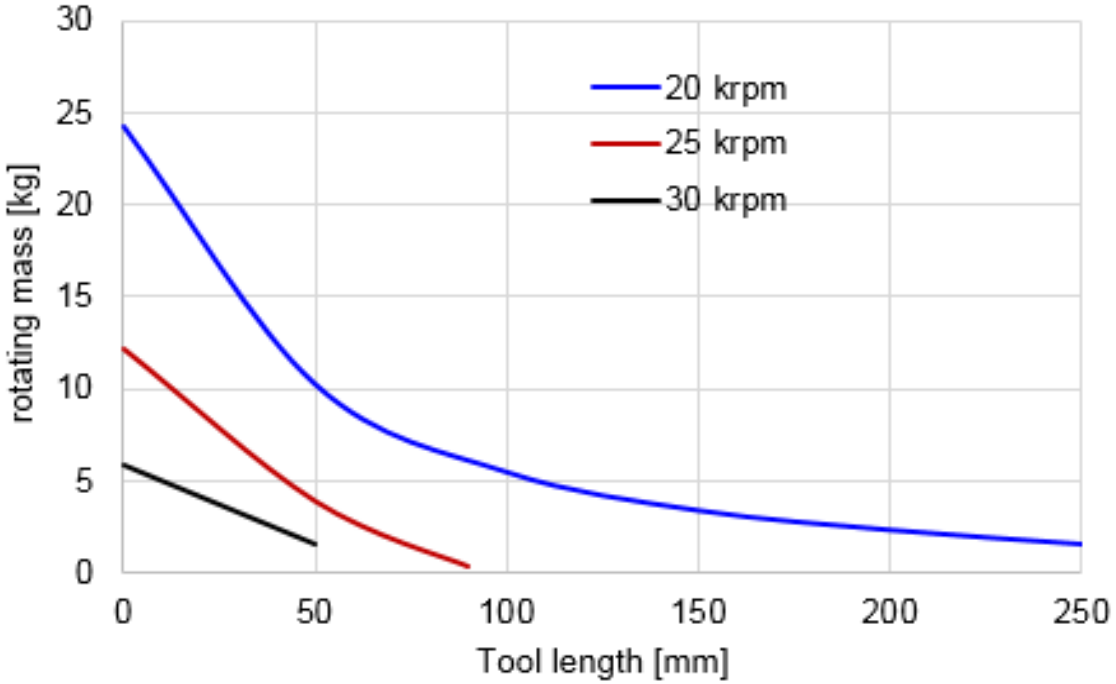

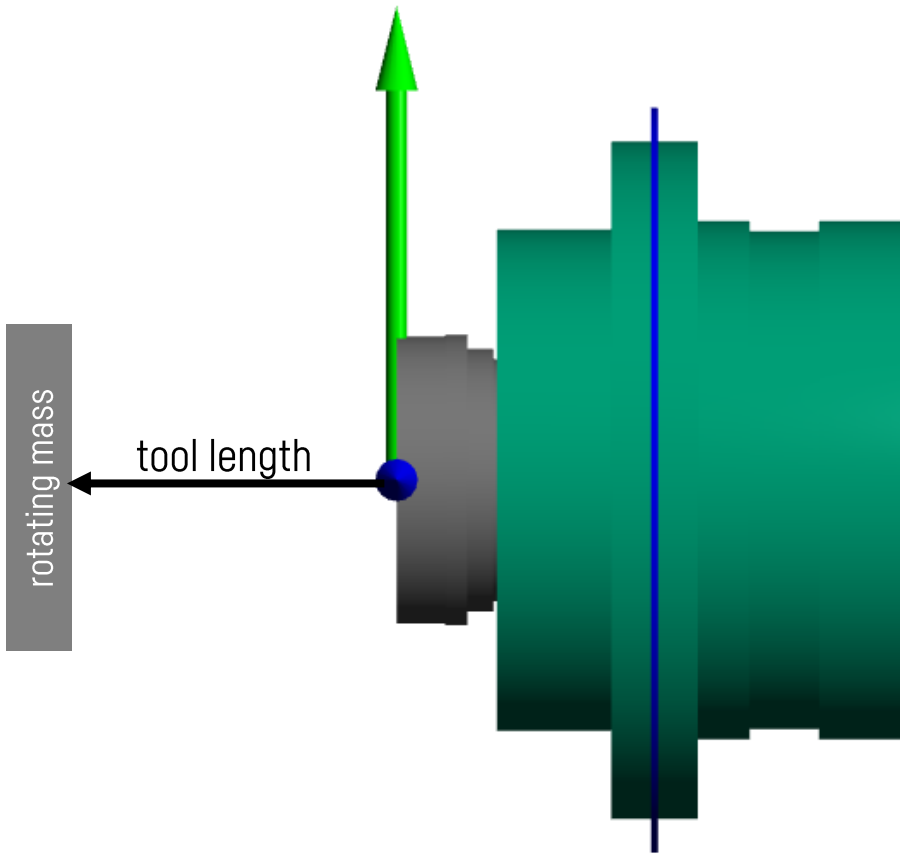

- balancing grade of rotating mass: G2.5
- global Rayleigh-damping: 1%

3. Types of Universal Supporting Bearing Arrangements

3.3 Type **1585LS1**

– Friction losses

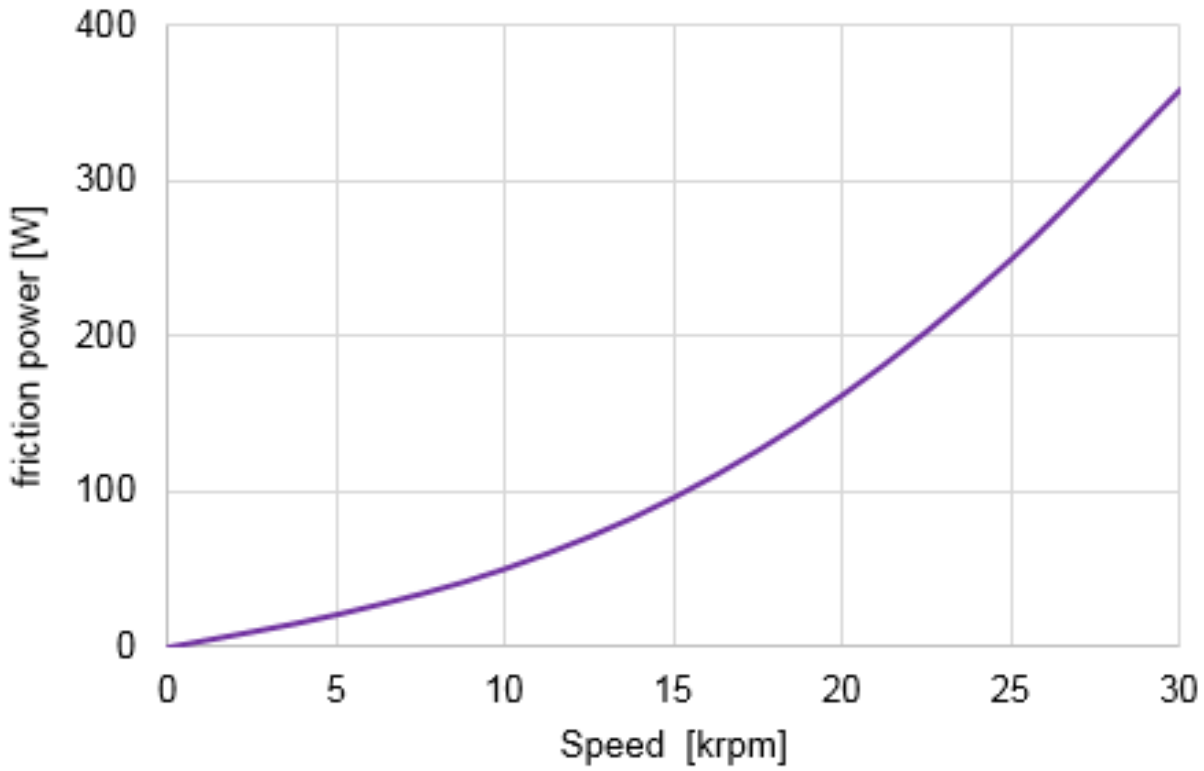

3. Types of Universal Supporting Bearing Arrangements

3.4 Type **1693LS1**

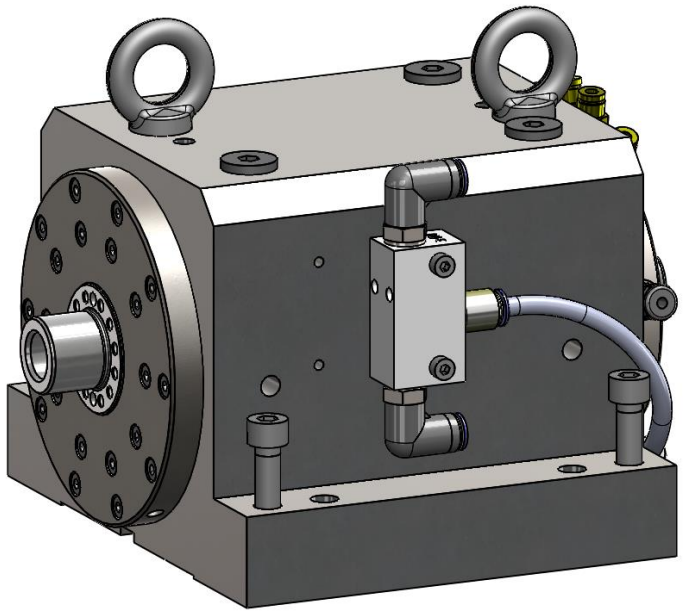

type of lubrication	speed limit [min^{-1}]
oil-air lubrication	60.000
grease replenishing technology	45.000
greased for life (F_{10} = 10,000 h at n_{max})	30.000

Other speeds on request.

3. Types of Universal Supporting Bearing Arrangements

3.4 Type **1693LS1**

- Mass of shaft: 0.8 kg
- Inertia of the shaft: 0.000110 kgm²
- Rigidity at shaft nose
  - Axial static: 40 N/µm
  - Axial dynamic: 30 N/µm (at 60,000 rpm)
  - Radial static: 36 N/µm
  - Radial dynamic: 30 N/µm (at 60,000 rpm)

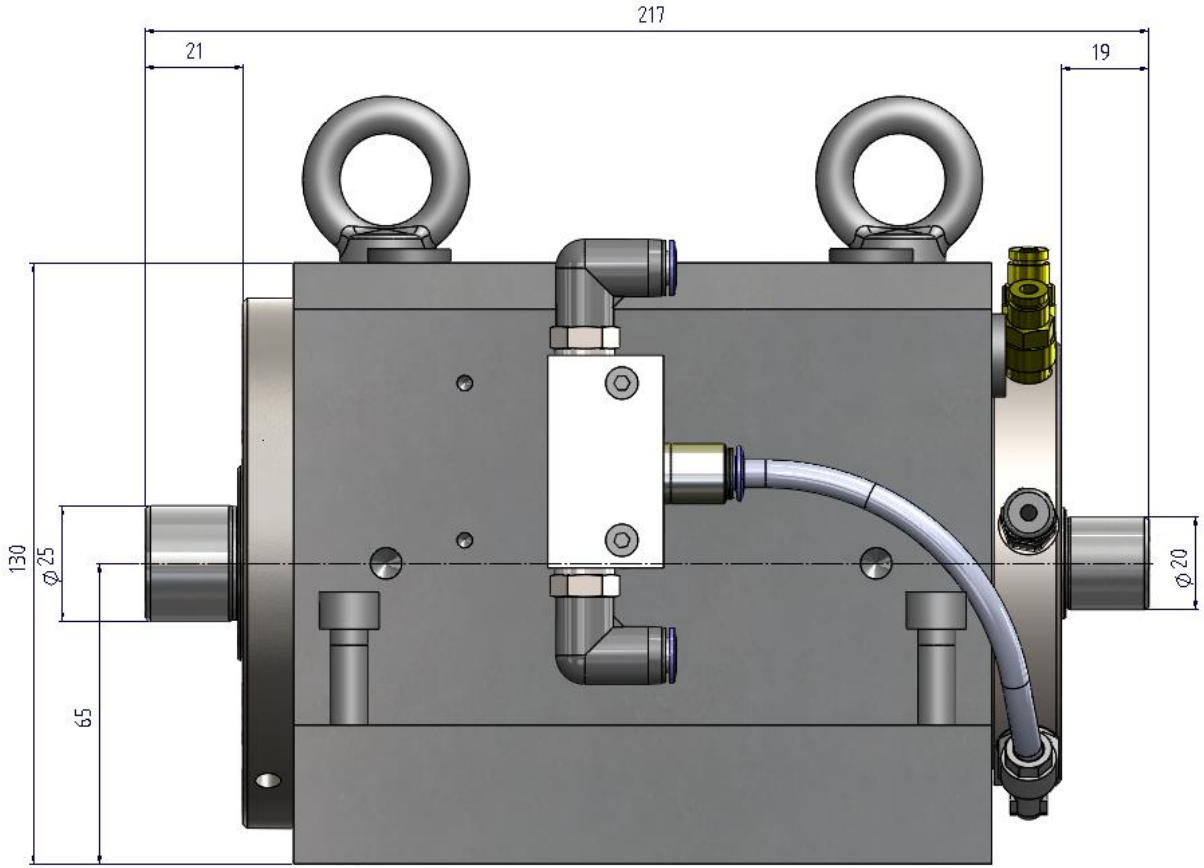

3. Types of Universal Supporting Bearing Arrangements

3.4 Type **1693LS1**

– Axial load – in pushing direction

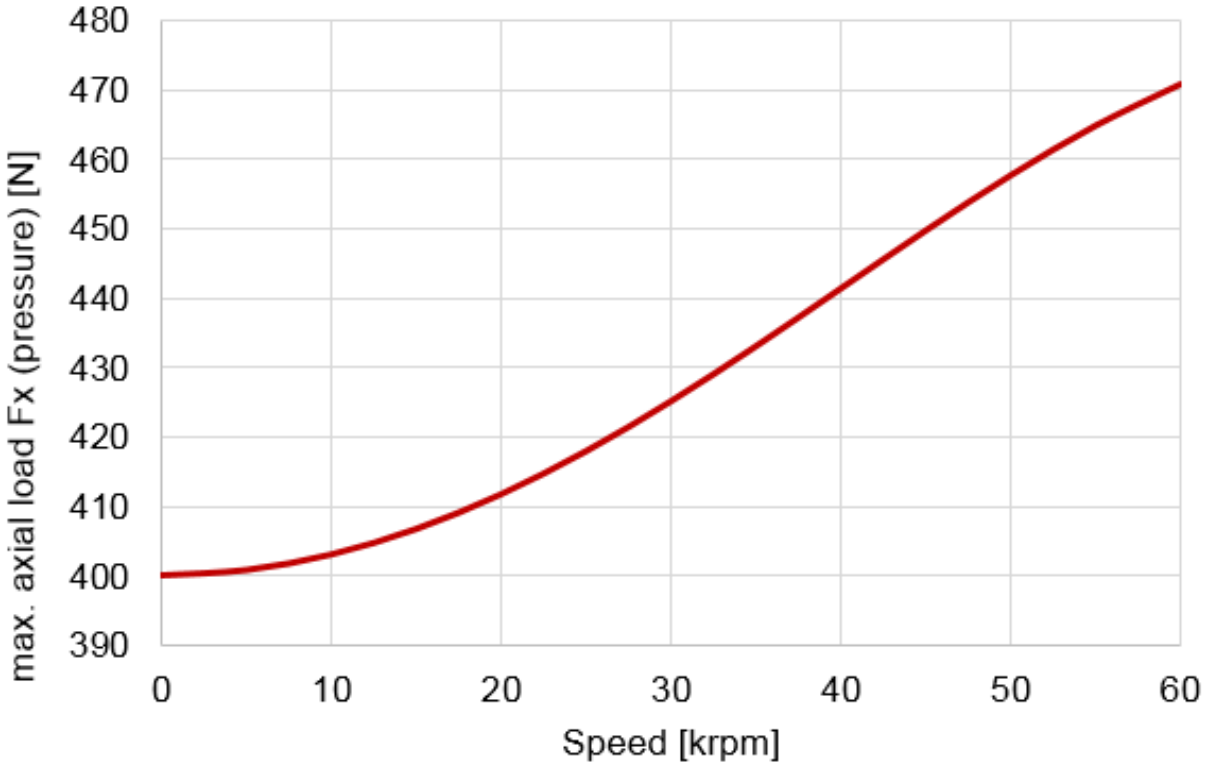

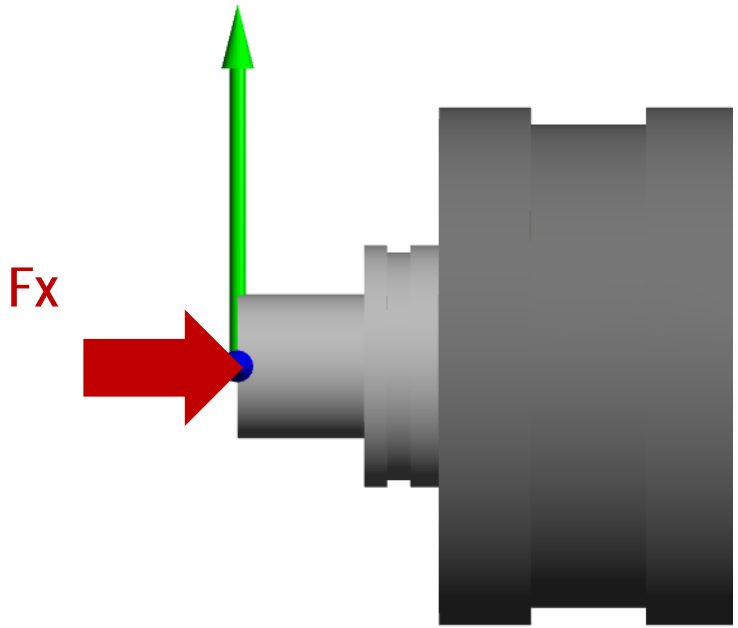

3. Types of Universal Supporting Bearing Arrangements

3.4 Type **1693LS1**

– Axial load – in pulling direction

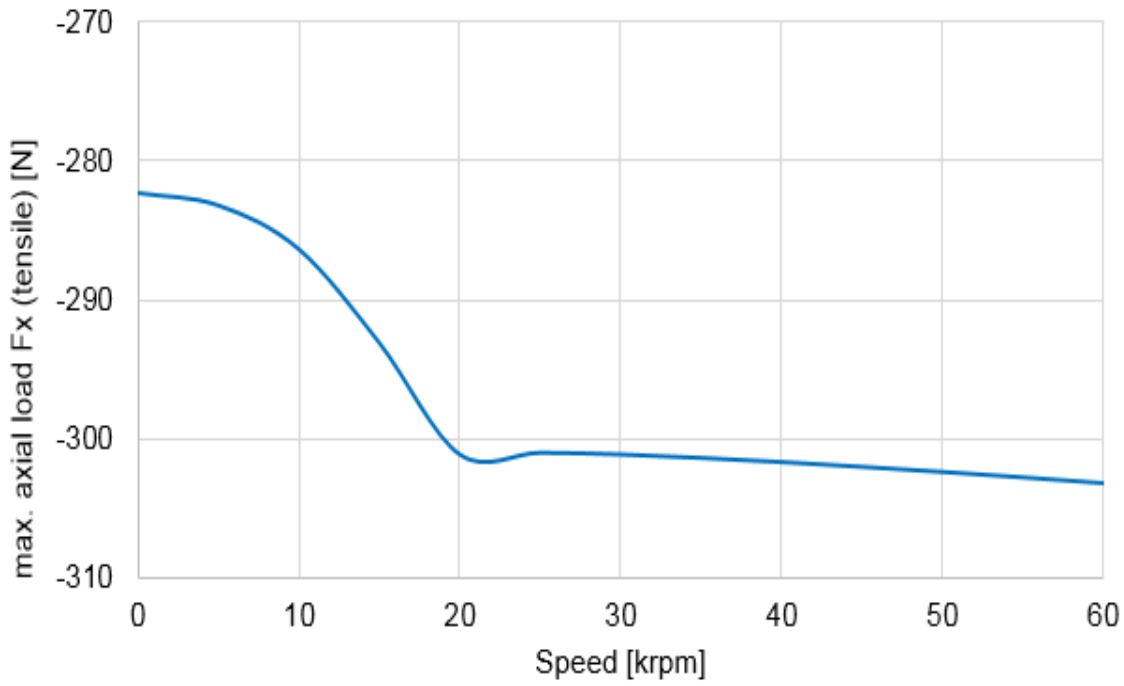

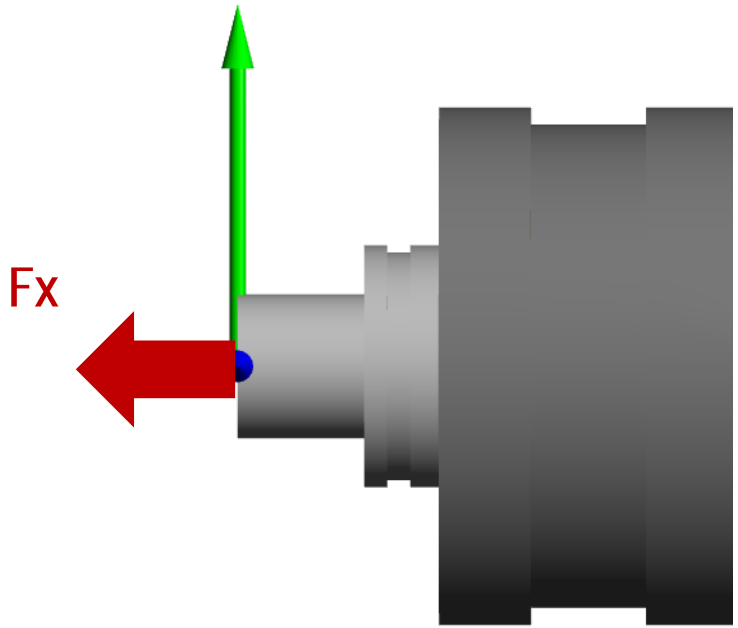

3. Types of Universal Supporting Bearing Arrangements

3.4 Type **1693LS1**

– Radial load

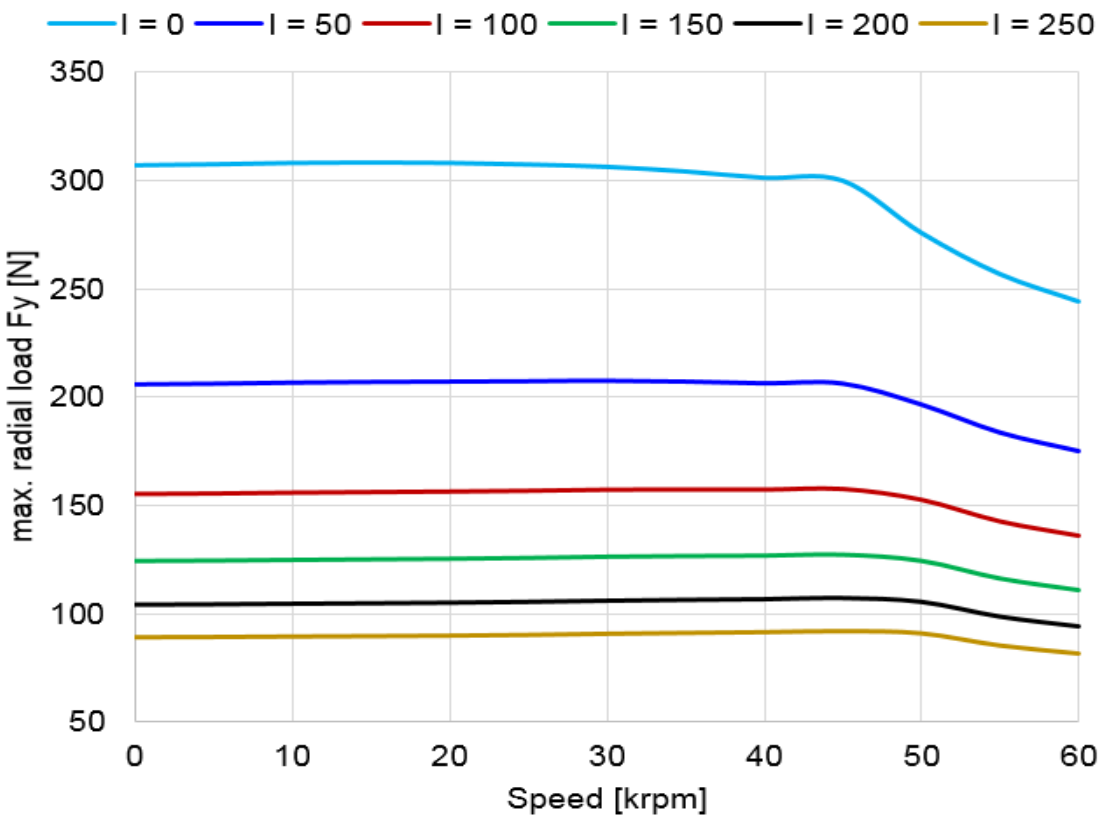

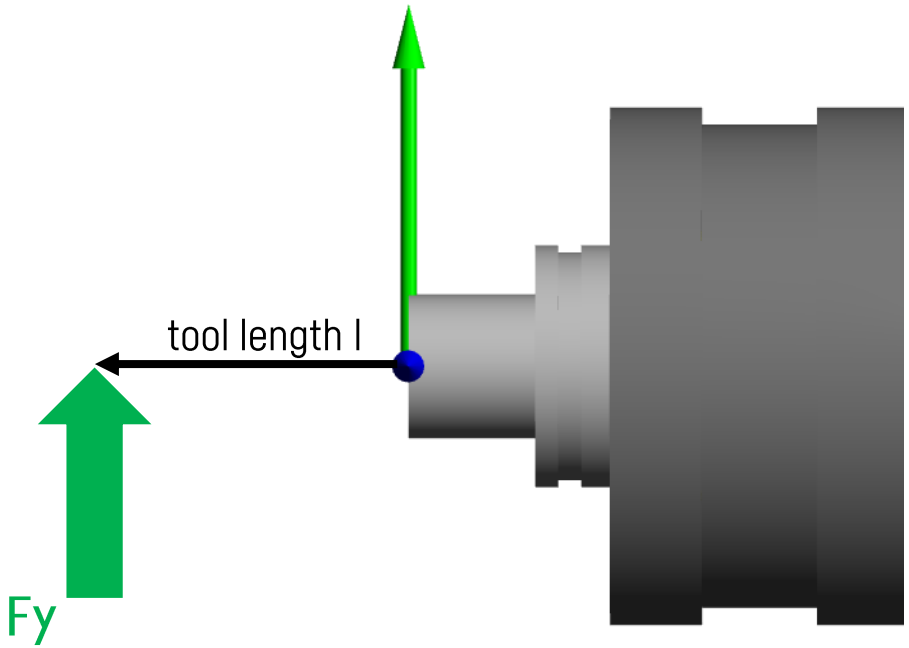

3. Types of Universal Supporting Bearing Arrangements

–

3.4 Type **1693LS1**

– Dynamic load

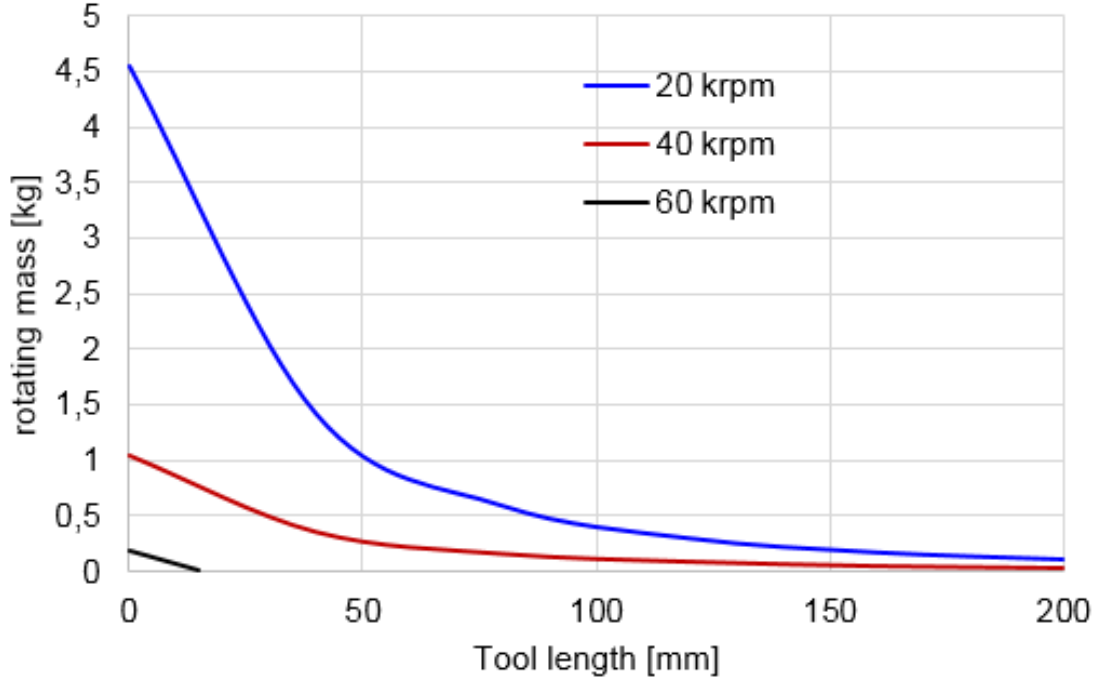

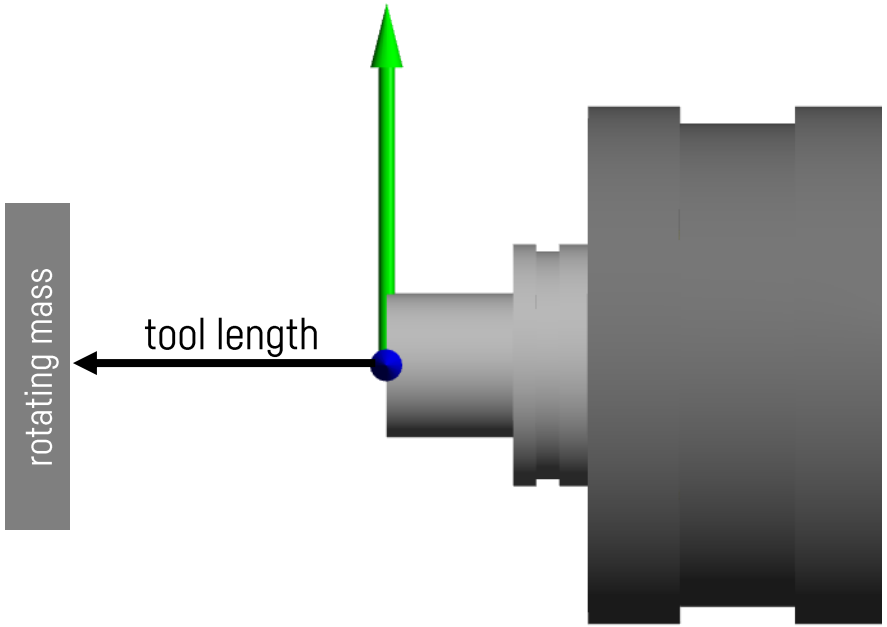

- balancing grade of rotating mass: G2.5
- global Rayleigh-damping: 1%

3. Types of Universal Supporting Bearing Arrangements

3.4 Type **1693LS1**

– Friction losses

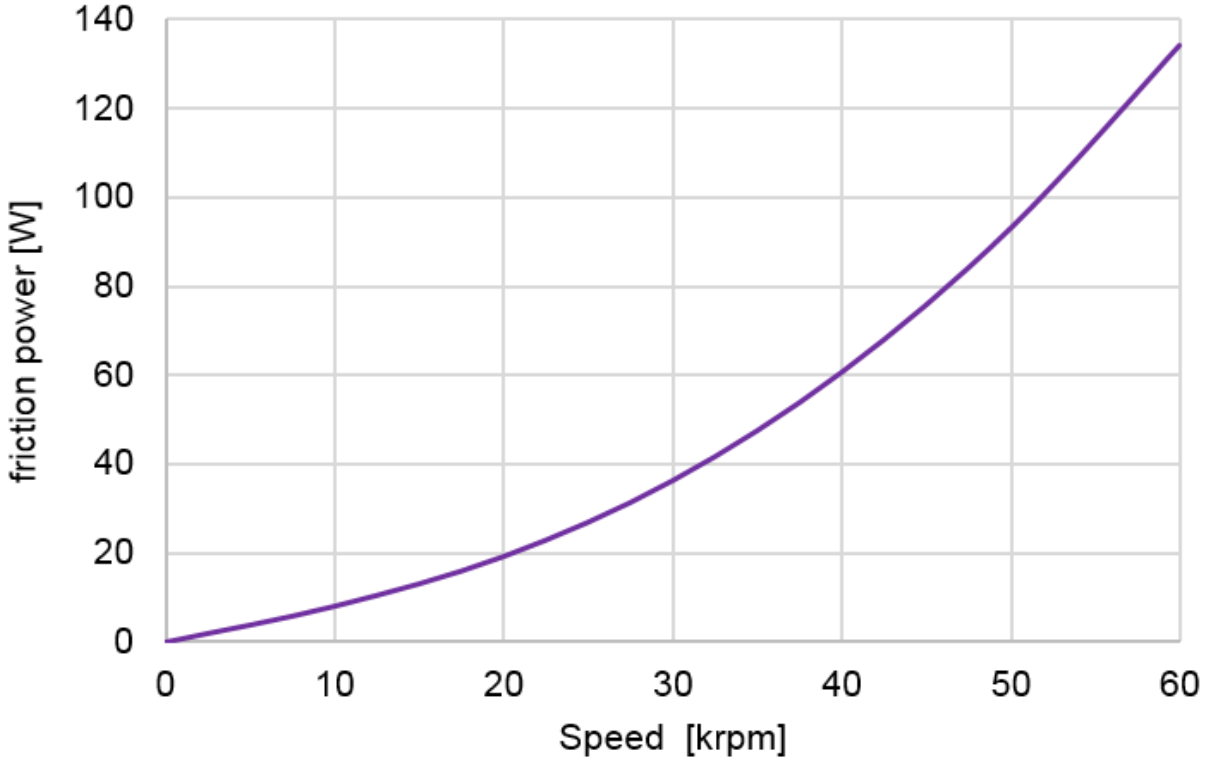

4. High-speed, High-precision Couplings for Test Benches

—

Low Axial Loading

4. High-speed, High-precision Couplings for Test Benches

4.1 Low Axial Loading

Coupling set	max. Torque [Nm]	Speed [rpm]	Support bearing units at max. speed
9951KP1	750	26,000	1564LS1 / 1585LS1
9952KP1	670	30,000	1671LS1
9953KP1	1075	23,000	
9954KP1	2400	8,950	

- Information subject to adaptation
- Higher speeds possible on request
- Adaptation of the coupling according to customer requirements

5. Calculation Services

—

Calculation of Electrical Motors and Complete Test Benches | Calculation Principles

5. Calculation Services

5.1 Calculation of Electrical Motors and Complete Test Benches

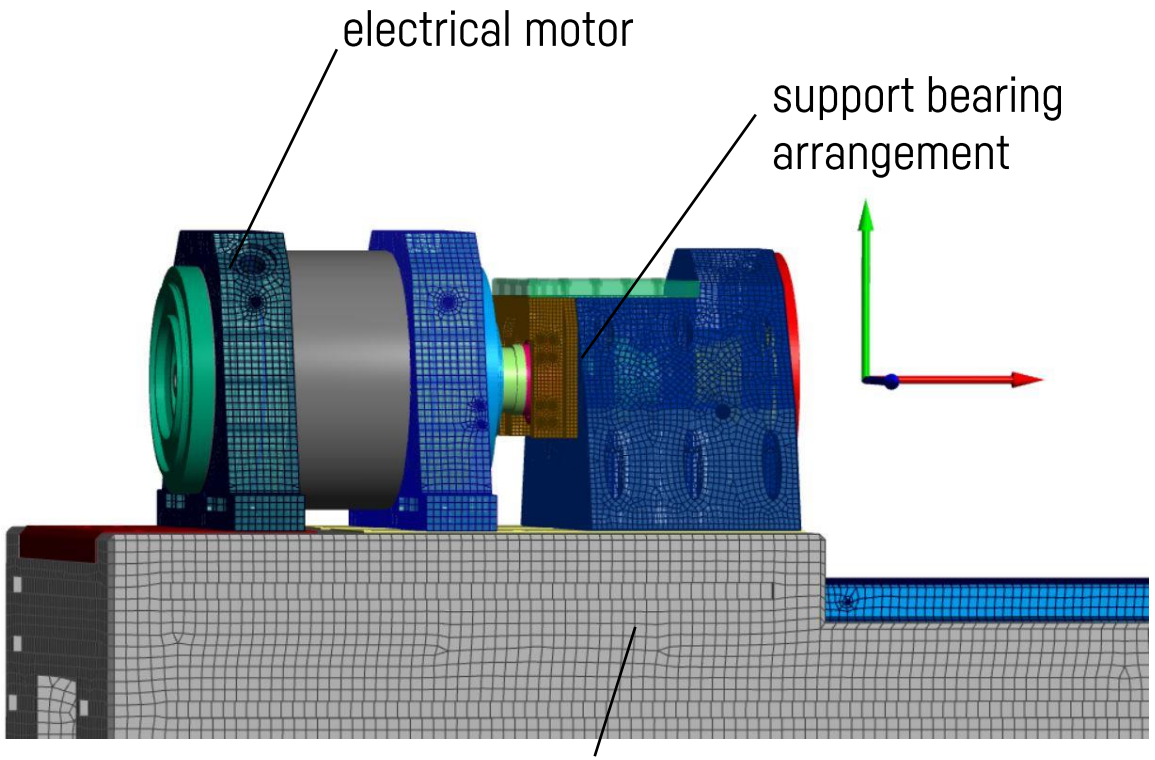

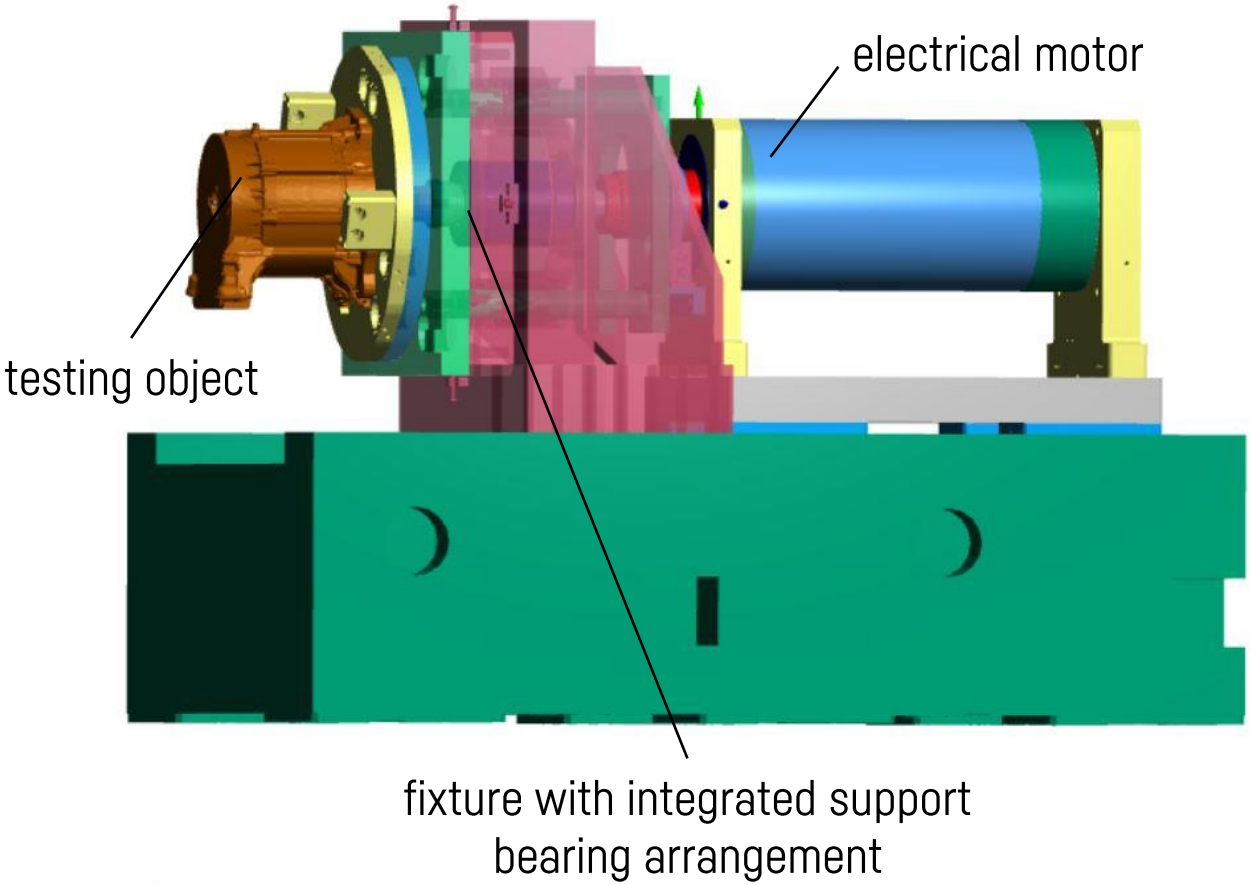

5. Calculation Service

5.2 Calculation Principles

- **Bearing arrangements** do not have linear behavior versus speed! Catalog data are not suited for precise calculations!
- Calculations with GTW programs are based on proven analytic bearing formulas and linked with a special FE module. Only this guarantees precise, reliable results for the design of high-end systems.
- Calculations can be done on rigidity of systems in operation, load carrying capabilities of bearing arrangements, **rotor dynamics**, lubrication, bearing life etc.
- It is possible to calculate for **multiple axis systems,** including all **test bench components** and environment.
- GTW is offering **seminars** on bearing calculation based on more than **20 year experience**.

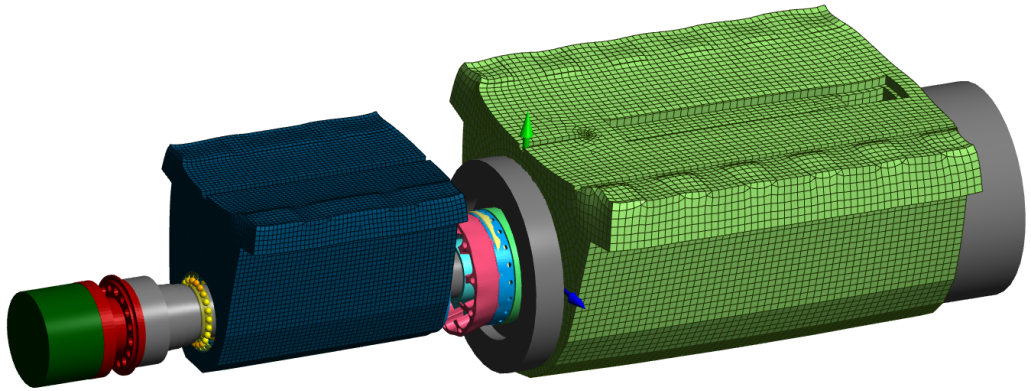

Precise calculations help to design test benches more quickly!

Tell us about the project you have in mind

—

We will make it possible

Tel.: +49 (0) 9721.9480 100
Mail: info@gtwgmbh.com

www.gtwgmbh.com